BUCHER HYDRAULICS

Directional Control Valve HDS34

Load Sensing

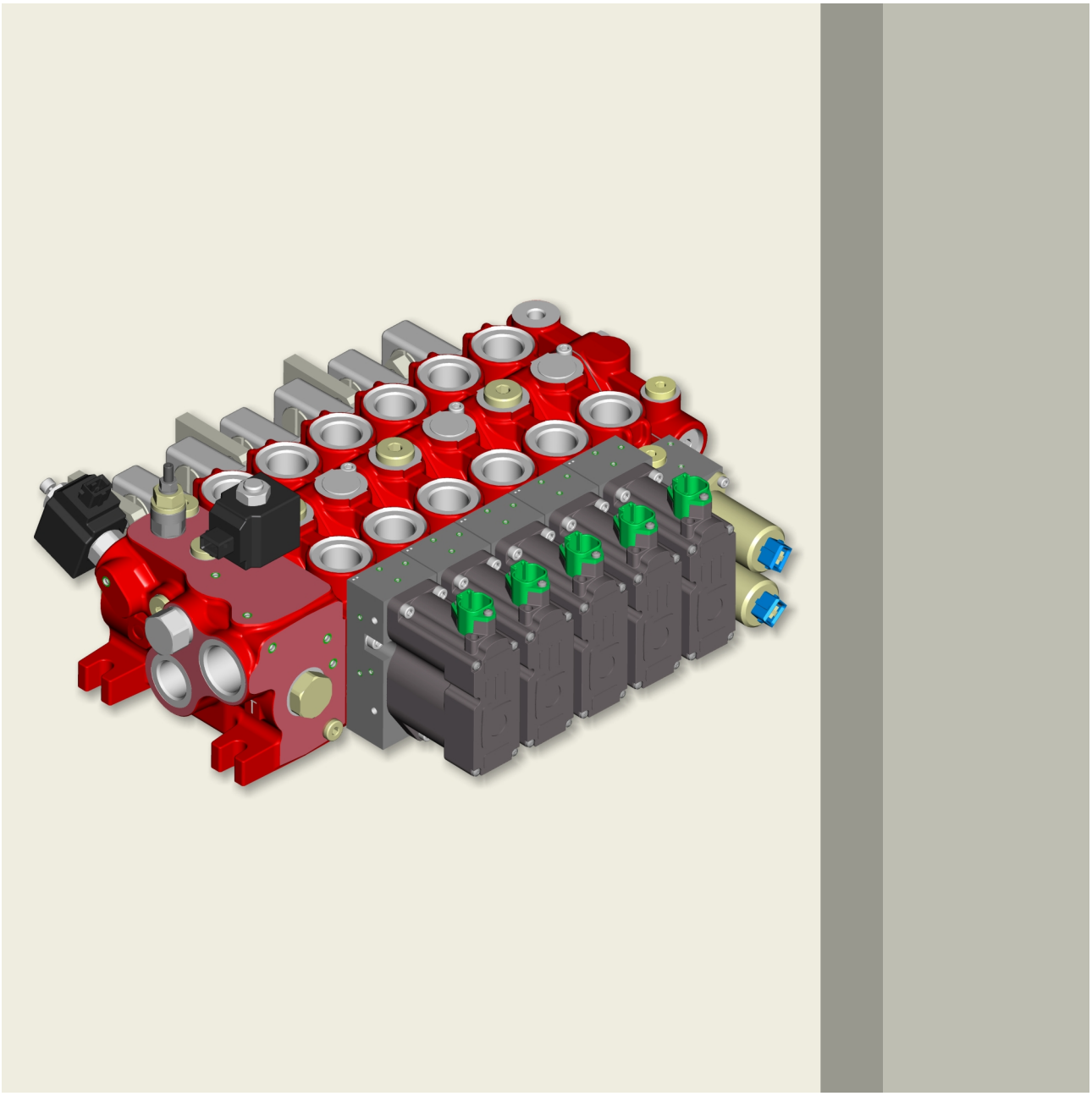

motion and progress

Reference: 200-P-991227-E-03

Issue: 04.14

BUCHER HYDRAULICS

Contents

Page

1	General information		4
	1.1	Introduction	4
	1.2	Directional valve installation	4
	1.3	Fittings	4
	1.4	Hydraulic fluid	5
	1.5	Filtration	5
	1.6	Directives and standards	6
	1.7	Technical specification:	6
2	Inlet covers		7
	2.1	Standard, for fixed/LS pumps	7
	2.2	With priority for steering function	10
3	Elements		12
	3.1	With flow sharing compensator	12
	3.2	With check valve	12
	3.3	Ports size	12
	3.4	Element hydraulic schemes	13
	3.5	Seal kit	13
4	Spools		14
	4.1	Spools metering	15
	4.2	Pressure drops	17
5	Valves		18
	5.1	LS signal adjustable relief valve	18
	5.2	Pressure reducing valve PRR818	18
	5.3	Anti-shock and anti-cavitation valves UC	19
	5.4	Anti-cavitation valves C	20
	5.5	LS signal normally open unloading valve (SPF)	20
	5.6	LS signal normally open unloading valve with manual override (SPE)	20
	5.7	LS signal normally closed unloading valve (SPF normally closed)	21
	5.8	Pilot oil supply cut-off valve	21
	5.9	Coils for solenoid valves	22
	5.10	LS signal flow compensated drain valve (VRC)	23
	5.11	LS line manual shut-off valve (NV1)	23
	5.12	Direct acting proportional pressure reducing valve / ON-OFF directional valve	24
6	Levers		25
	6.1	Standard lever group	25
	6.2	Free end spool with dust proof seal	25

6.3 Standard joystick control 26
6.4 Joystick control with integrated locking system 27
6.5 Pressurised positioner and lever caps (EHO - EHC functions) 28

7 Positioners 31
7.1 Spring return to neutral position 31
7.2 Detent in floating position and spring return to neutral from position 1 and 2 31
7.3 Electro-magnetic detent (EMD) 32
7.4 Microswitch positioners 33
7.5 Electro-mechanic locking system 34
7.6 Hydraulic controls 35
7.7 Hydraulic control + floating position 36
7.8 Electro-hydraulic open loop proportional / ON-OFF control (EHO) 37
7.9 Electro-hydraulic closed loop proportional control 38
7.10 Spool position transducer 39

8 End covers 40
8.1 Blanking plate (P0... series) 40
8.2 Blanking plate with LS drain valve and LS line manual shut-off valve (P0... series) 41
8.3 End cover with tank line ports (PT... series) 42
8.4 End cover with LS relief valve and tank line ports (PT... series) 43
8.5 End cover with unloading compensator (PC... series) 44
8.6 Sliding function end cover specific for backhoe application (PS... series) 45

9 Suitable applications (Examples) 46
9.1 Telehandlers
Assembling positions / controls flexibility 47
9.2 Wheel loader
Assembling positions / controls flexibility 48
9.3 Backhoe loader
Assembling positions / controls flexibility 49

10 Composition of ordering code 50
10.1 Std inlet cover 50
10.2 Priority for steering inlet cover 51
10.3 Elements 52
10.4 Blanking plate end cover 53
10.5 End cover with tank line ports 54
10.6 End cover with unloading compensator 55
10.7 Sliding function end cover 56
10.8 Product identification plate 57

1 General information

1.1 Introduction

More than 20 years of leading presence and successful supplies in the telescopic loaders sector, the deep know-how gained in the earthmoving machines field and the strong commitment to anticipate the upcoming technical and application needs of our customers, have guided Bucher Hydraulics Reggio Emilia in the development of the flow sharing directional valve HDS34.

The stakable construction with a wide range of inlet and outlet covers as well as of controls, gives the designer a high degree of freedom in the choice of the assembling position of the valve and of the hydraulic circuit which fits in the best way the machine requirements.

Each valve section can be equipped with a load holding valve as well as a pressure compensator, in order to satisfy the requirements of both basic and premium machines, where a function control independent from the load and the inlet flow is requested.

HDS34 can be equipped with single levers or dual axis joystick, hydraulic proportional, open and closed loop electro-hydraulic proportional controls. The wide range of controls combined with the compact dimensions, especially in height which is a big issue in the development of machine cabins, makes the HDS34 a very flexible valve able to fulfil all the requirements of modern machines.

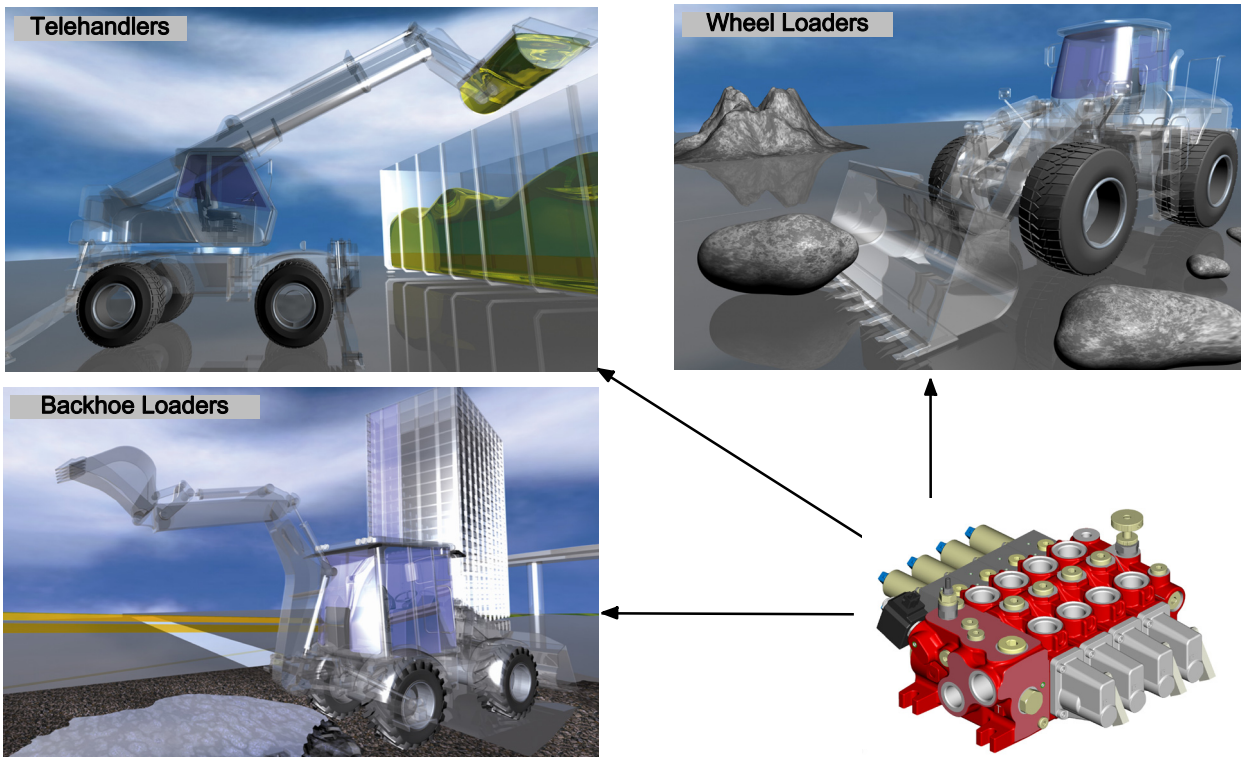

1.2 Directional valve installation

For the installation of the directional control valve on the equipment frame it is important to consider the following recommendations:

- the valve can be assembled in any position but, in order to avoid deformations and spool sticking, the surface on which the product is mounted has to be flat;
- before connecting pipelines, make sure that the pipeline hollows as well as fittings and seals are thoroughly clean; check also that the work ports are protected until the connection of the pipelines
- during assembly and servicing operations, it is necessary to adopt clean procedures and work in an environment free of chips, swarf, dust and other possible source of pollution;
- if the spools are connected to the equipment controls through linkages, make sure that they do not affect their operation;
- before painting the valve, check that the work port plastic plugs are tightly in place.

1.3 Fittings

In the interest of safety, only fittings with STRAIGHT THREAD ENDS should be used (e.g. DIN3852).

Fittings with TAPERED THREAD ENDS (e.g. DIN 3852 form C) must never be used, as they can cause deformation and cracks in the valve body.

Our warranty conditions will not be valid in case tapered fittings are used.

The work port adaptors have to be fastened respecting the tightening torque values indicated in the following table (for different port types contact our Sales Dept.):

Recommended tightening torque for work port fittings - Nm / *lbft*					
Metric - ISO 261	**M14X1.5**	**M18X1.5**	**M22X1.5**	**M27X2**	**M33x2**
With O-Ring seal (ISO 6149-1)	30 / *22.1*	40 / *29.5*	60 / *44.3*	90 / *66.4*	100 / *73.8*
With copper washer (ISO 9974-1)	30 / *22.1*	40 / *29.5*	60 / *44.3*	90 / *66.4*	100 / *73.8*
With rubber washer or steel (ISO 9974-1)	25 / *18.4*	35 / *25.8*	60 / *44.3*	70 / *51.7*	90 / *66.4*
BSP - ISO 228-1	**1/4" BSP**	**3/8" BSP**	**1/2" BSP**	**3/4" BSP**	**1" BSP**
With copper washer (ISO 1179-1)	30 / *22.1*	40 / *29.5*	60 / *44.3*	90 / *66.4*	100 / *73.8*
With rubber washer or steel (ISO 1179-1)	25 / *18.4*	35 / *25.8*	60 / *44.3*	70 / *51.7*	90 / *66.4*
UN-UNF - ISO 263	**SAE6 - 9/16-18 UNF**	**SAE8 - 3/4-16 UNF**	**SAE10 - 7/8-14UNF**	**SAE12 - 1-1/16-12UNF**	**SAE16**
With O-Ring seal (ISO 11926-1)	30 / *22.1*	40 / *29.5*	60 / *44.3*	90 / *66.4*	130 / *95.9*

For metric threads availability please contact our Sales Department

IMPORTANT!: Tightening torques depends on several different factors including lubrication, coating and surfaces finish. The fitting manufacturer shall be consulted.

1.4 Hydraulic fluid

The main function of the fluid used in hydraulic systems is to transfer energy but it performs also other important functions: protect the components from corrosion, lubricate the directional valve sliding parts, remove particles and heat from the system.

In order to ensure proper operation and long life of the system it is important to choose the correct hydraulic fluid with proper additives.

Bucher Hydraulics recommends to use a mineral based oil responding to ISO 6743/4 requirements, only.

The system should be operated only with hydraulic oil containing anti-foaming and antioxidant additives. Before using other types of fluid, please contact our Sales Dept, since they can cause serious damage to the directional valve components and jeopardize the correct function of the system.

1.5 Filtration

In order to ensure proper operation and long life of the directional valve components it is extremely important to provide a proper and effective filtration of the hydraulic fluid.
It is advisable to follow filter manufacturers instruction and recommendations.

The fineness of the filter should be selected in order to guarantee that a contamination level of 20/18/15 ISO 4406:1999 (NAS 1638 class 9) is not exceeded.

When the high reliability of the system is an important requirement a 10 µm nominal pressure filter must be used. In these cases it is also advisable to use a pressure filter with by-pass and indicator.

For mechanical operated directional valves a <30 µm nominal return filter is adequate.

The size of the return filters must suit the maximum return flow whereas the size of the pressure filters must suit the maximum pump flow.

It is advisable to fit filters with pressure gauge or dirt indicator in order to make it possible to verify the filter condition.

Particular attention has to be paid to the cleaning of the machine hydraulic circuit and its components before the first run-in, since the presence of foreign materials could cause damages to the directional valve components even if a proper filtration is provided. The filters integrated in the HDS34 are provided to protect the valve components against big particles and not to filter the system.

In order to obtain the best performance of the system we recommend to strictly follow the conditions advised here above, failing which warranty shall be void.

1.6 Directives and standards

- Atex:

Attention: The equipment and protective systems of these catalogue ARE NOT intended for use in potentially explosive atmospheres that is to say where there is an explosive atmosphere referred to in Article 2 of the Directive 99/92/EC and referred to Article 1.3 of the Directive 94/9/EC

- **Machinery safety**

Hydraulic directional control valves are excluded by Directive 2006/42/CE

- **ISO 9001:2008 / ISO 14001:2004**

Bucher Hydraulics S.p.A. is certified for research, development and production of directional control valves, power units, gear pumps and motors, electro pumps, cartridge valves and integrated manifolds for hydraulic applications.

1.7 Technical specification:

IMPORTANT!: Parameter values and diagrams shown in this catalogue have been measured with mineral oil having a viscosity of 23 mm^2/s at 50° C

Features		
Max inlet flow	**180 l/min** *(48 US gpm)*	
Max work port A/B flow (13 bar / *190 PSI* margin)	**150 l/min** *(40 US gpm)*	
Max return flow admitted	**250 l/min** *(67 US gpm)*	
Supply port P max continuous operating pressure	**300 bar** *(4350 PSI)*	
Work port A/B max peak pressure	**350 bar** *(5070 PSI)*	
Max back pressure (*)	**30 bar** *(430 PSI)*	
Max internal leakage A/B→T (at 100 bar / 1430 PSI, 50° C, 23 mm^2/s) **Lower values on demand**	Without port valves	**20 cc/min**
	With port valves	**25 cc/min**
Max contamination level	**20 / 18 / 15 - ISO 4406:1999** *(NAS 1638 class 9)*	
Fluid temperature (NBR seals)	**-20°C / +80°C**	
Viscosity operating range	recommended	**from 15 to 75 mm^2/s**
	admissible	**from 12 to 400 mm^2/s**
Max number of elements	**10**	
Ambient temperature in operating conditions	With mechanical/hydraulic/ pneumatic controls	**from -30 to 60 °C**
	With electric/ electro-hydraulic devices	**from -30 to 50 °C**

For different operating conditions, please contact our Sales Dept.

(*) With electro-hydraulic pilot heads the back pressure must not exceed 5 bar. For higher back pressure values the pilot flow must be unloaded to tank through a separate line (Tp)

2 Inlet covers

2.1 Standard, for fixed/LS pumps

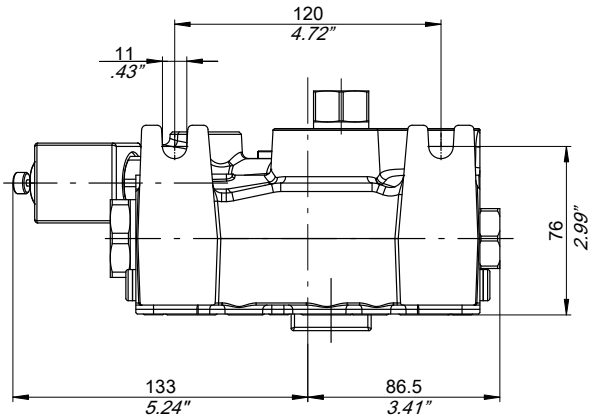

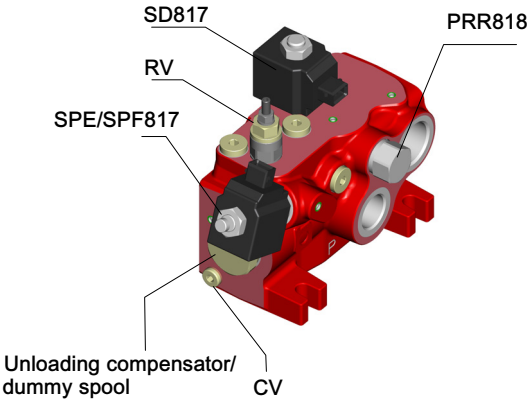

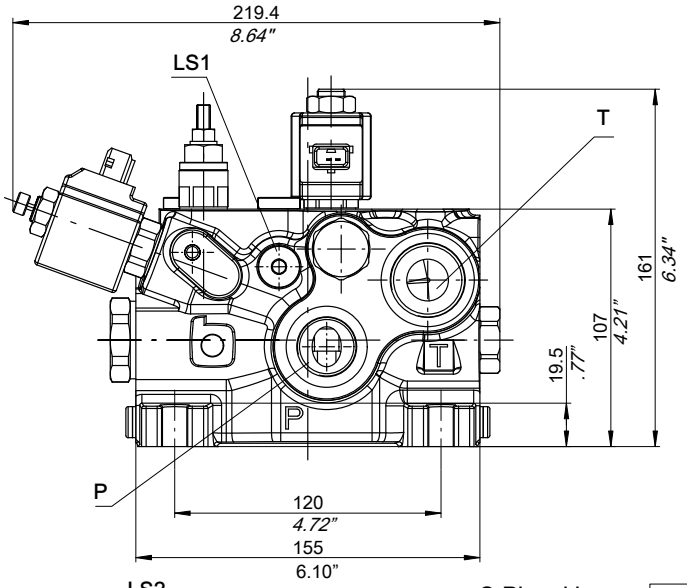

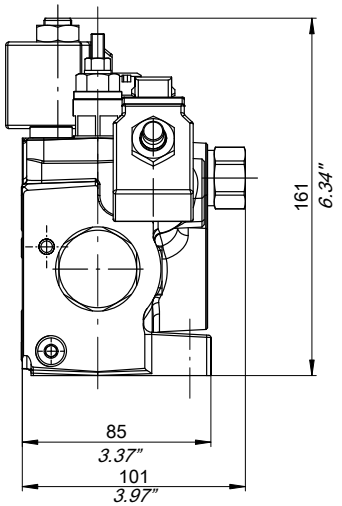

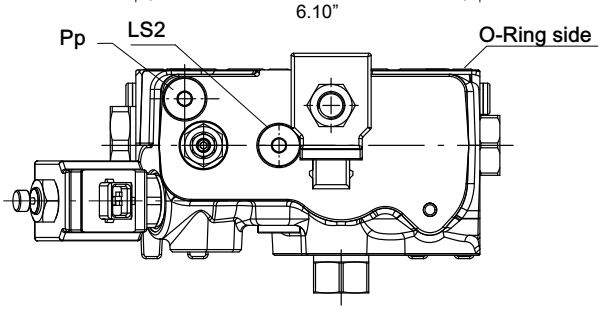

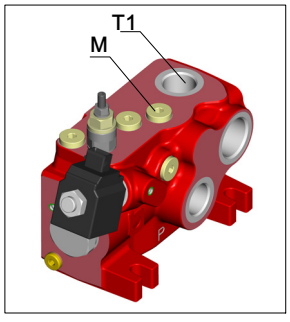

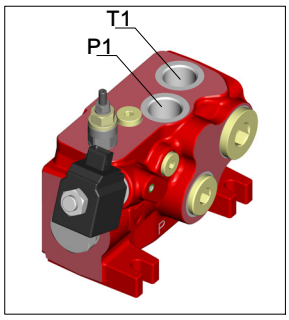

Approximate weight with SPF817 + SD817 + PRR818: 7,5 kg / *16.53 lbs*

RV = LS signal adjustable relief valve

CV = pilot tank line check valve (optional)

SD817 = pilot oil supply cut-off valve (optional)

SPE/SPF817= LS signal unloading solenoid valve (optional)

PRR818= pilot oil supply pressure reducing valve (optional)

2.1.1 Ports Size

Threads	P	T	T1 (Optional)	P1 (Optional)	LS1	LS2	Pp	M
BSP	3/4”	1”	3/4”	3/4”	1/4”	1/4”	1/4”	1/4”
UNF	SAE12	SAE16	SAE12	SAE12	SAE6	SAE6	SAE6	SAE6

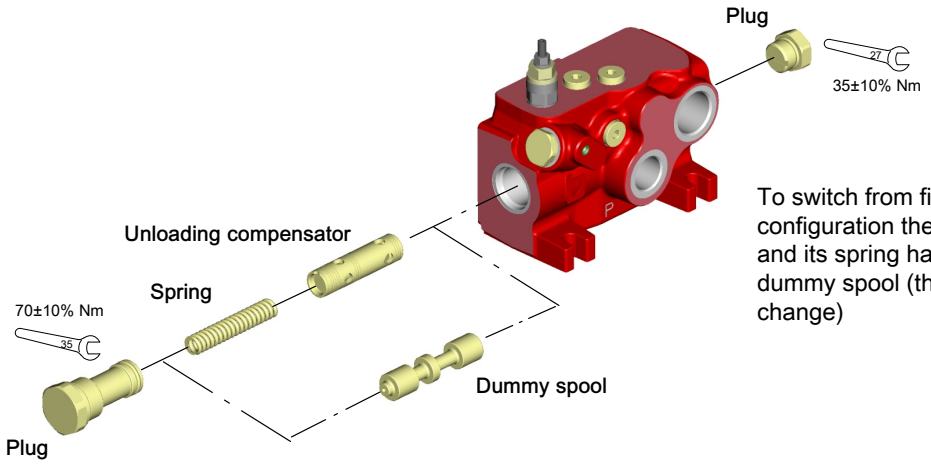

To switch from fixed pump to LS pump configuration the unloading compensator and its spring have to be replaced by the dummy spool (the external plug does not change)

2.1.2 Systems with fixed displacement pump - Examples

With LS relief valve

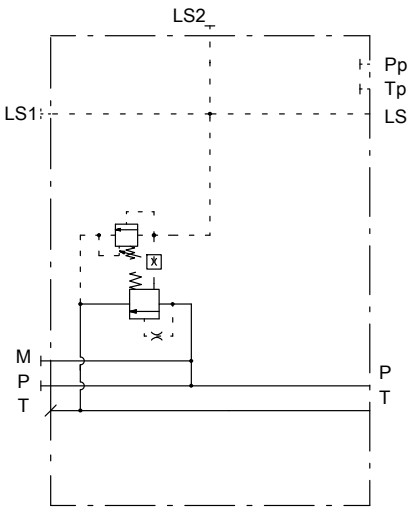

With LS relief valve + LS signal unloading valve + pilot tank line check valve

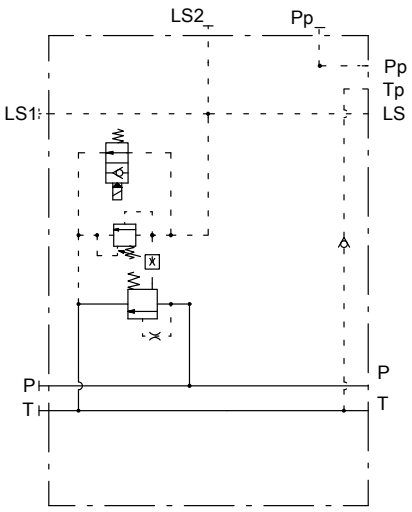

With LS relief valve + LS signal unloading valve + pilot oil supply pressure reducing valve + pilot tank line check valve

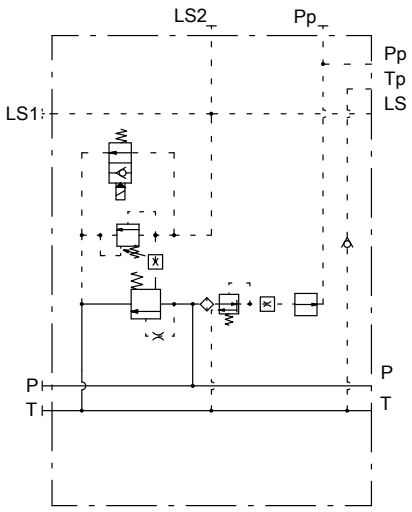

With LS relief valve + LS signal unloading valve + pilot oil supply pressure reducing and cut-off valve + pilot tank line check valve

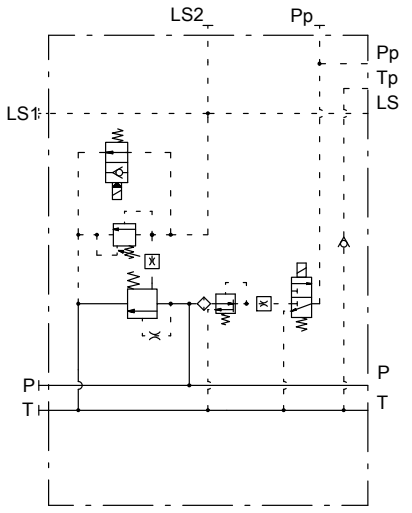

With pilot oil supply pressure reducing valve + pilot tank line check valve

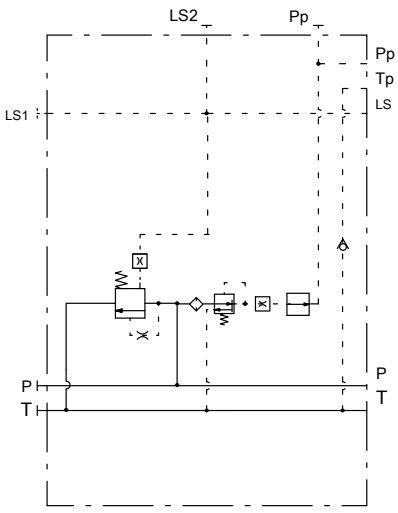

With pilot oil supply pressure reducing valve + cut-off valve + pilot tank line check valve

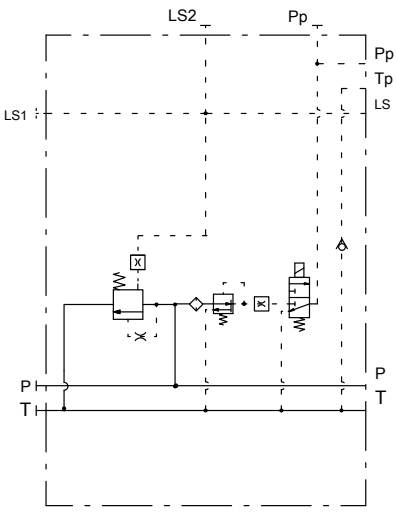

2.1.3 Systems with LS pump - Examples

With LS relief valve

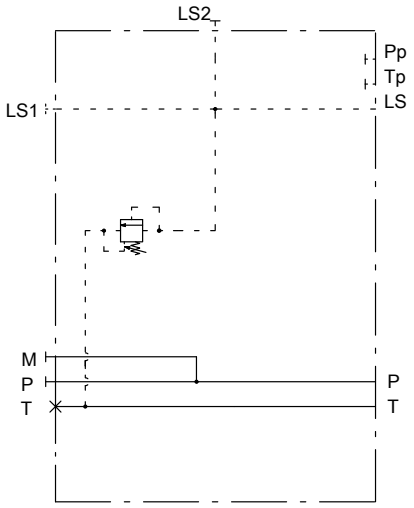

With LS relief valve + LS signal unloading valve

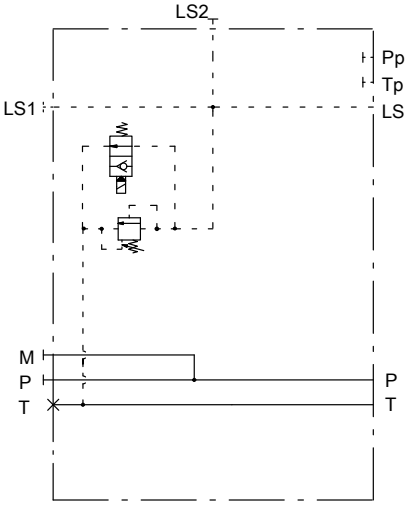

With LS relief valve + LS signal unloading valve + pilot oil supply pressure reducing valve + pilot tank line check valve

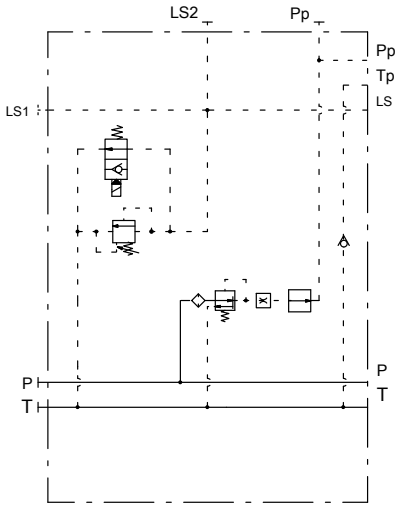

With LS relief valve + LS signal unloading valve + pilot oil supply pressure reducing valve + pilot tank line check valve and cut-off valve

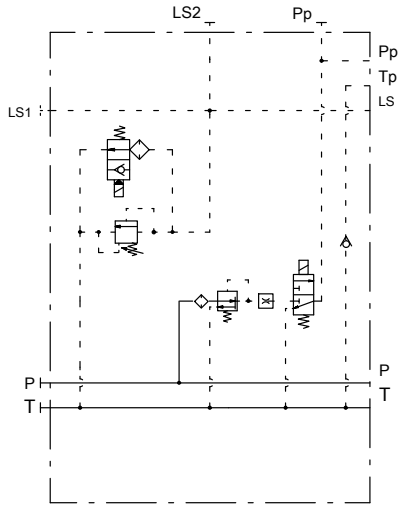

With pilot oil supply pressure reducing valve + pilot tank line check valve

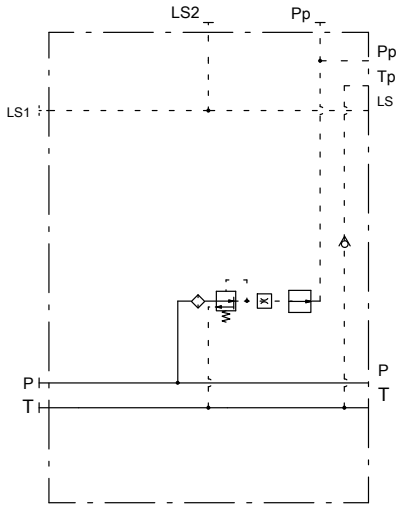

With pilot oil supply pressure reducing valve + cut-off valve + pilot tank line check valve

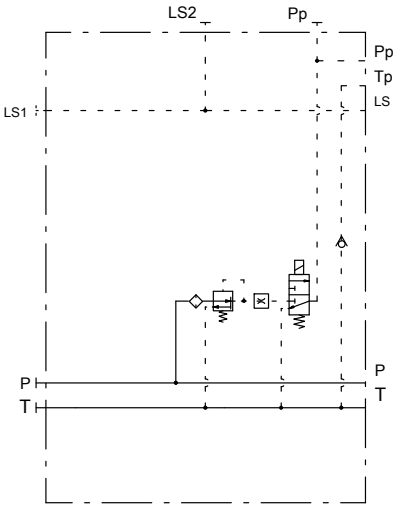

2.2 With priority for steering function

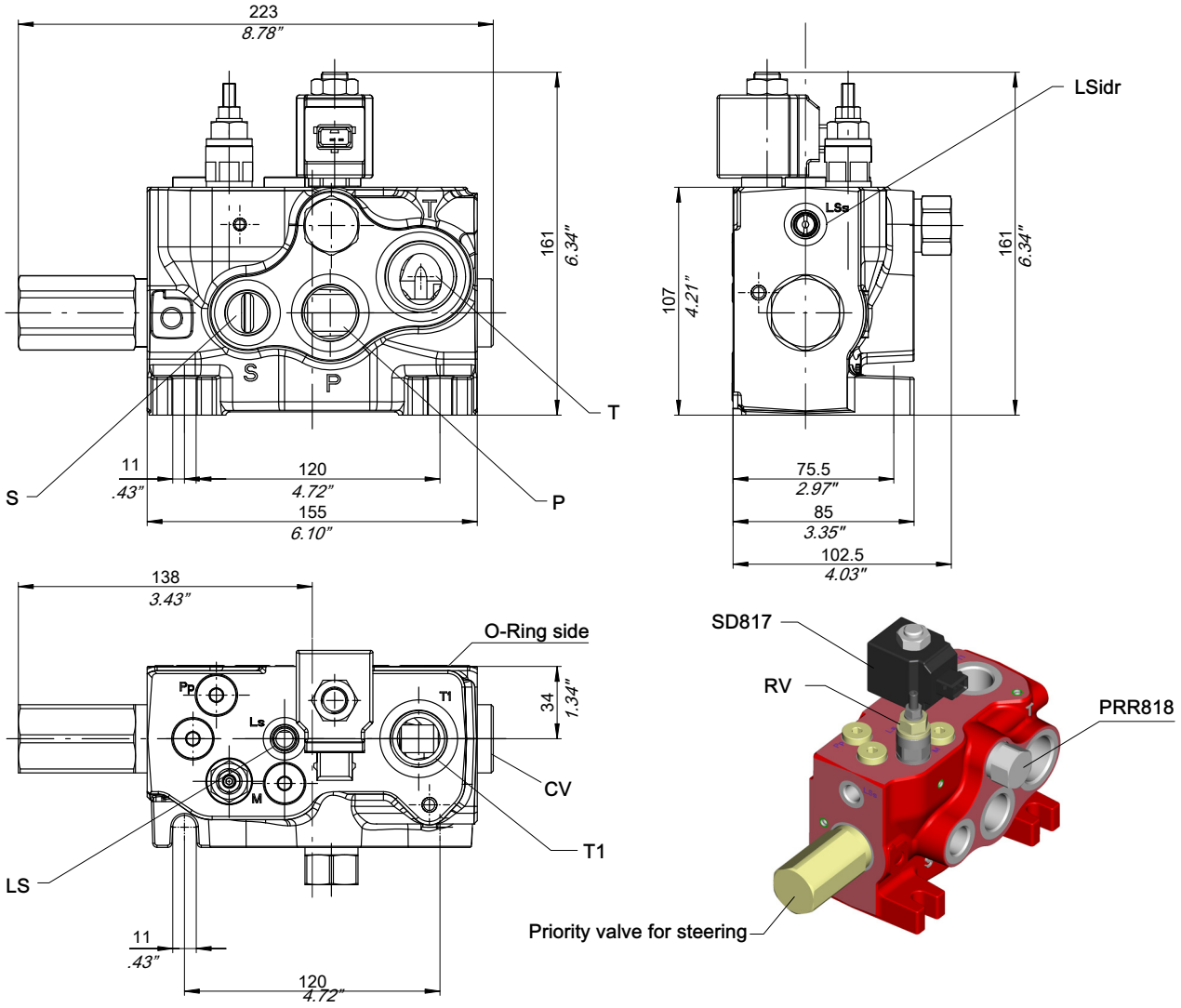

Approximate weight with RV, SD817, PRR818: 7,8 kg / *17,2 lbs*

RV = LS signal adjustable relief valve

CV = pilot tank line check valve

SD817= pilot oil supply cut-off valve (optional)

PRR818= pilot oil supply pressure reducing valve (optional)

2.2.1 Ports size

Threads	P	S	T	T1 (optional)	LSidr	LS
BSP	3/4”	1/2”	1”	3/4”	1/4”	1/4”
UNF	SAE12	SAE10	SAE16	SAE12	SAE6	SAE6

2.2.2 Systems with priority function for dynamic servo-steering - Examples

With pilot oil supply pressure reducing and cut-off valves

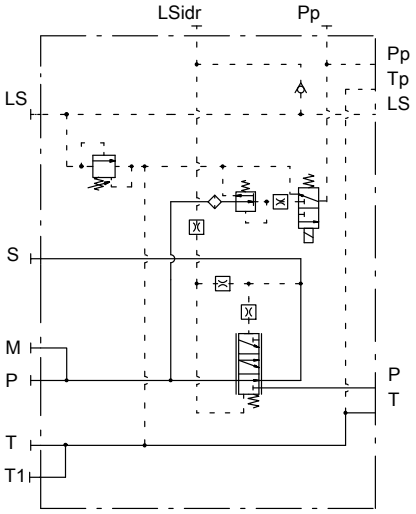

With pilot oil supply pressure reducing valve and check valve (Pp accumulator port)

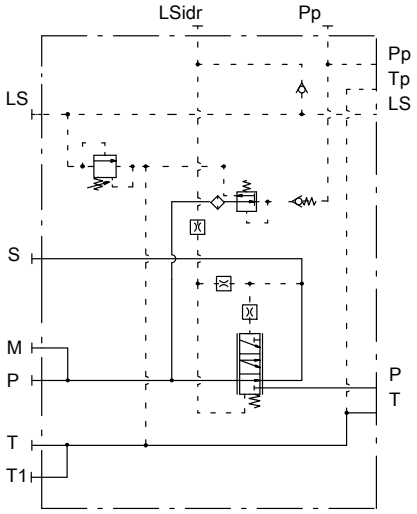

3 Elements

3.1 With flow sharing compensator

"KC": without check function (for functions with load holding valves on the cylinder)

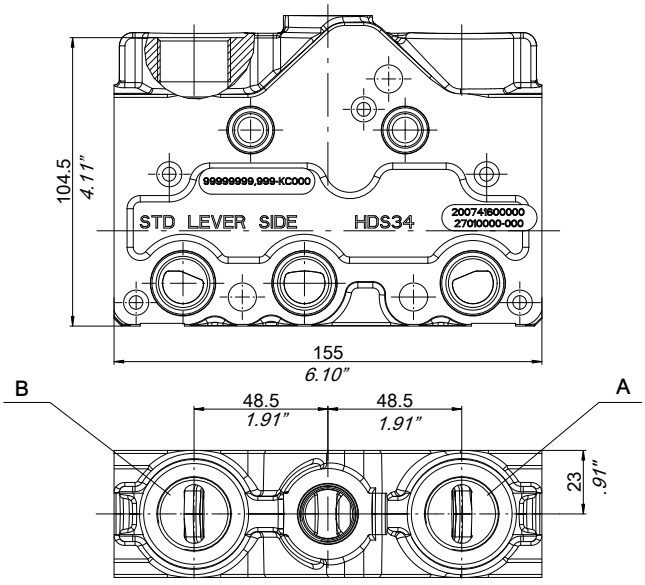

"KL": with check function (for functions without load holding valves on the cylinder)

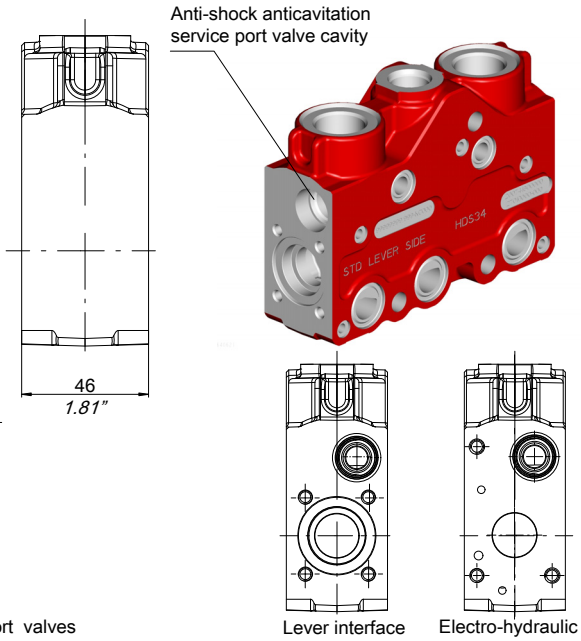

Approximate weight with spool, positioner 349, lever L100, element service port valves and compensator : 4,260 kg / *9,39 lbs*

3.2 With check valve

"KU": for functions with load holding valves on the cylinder

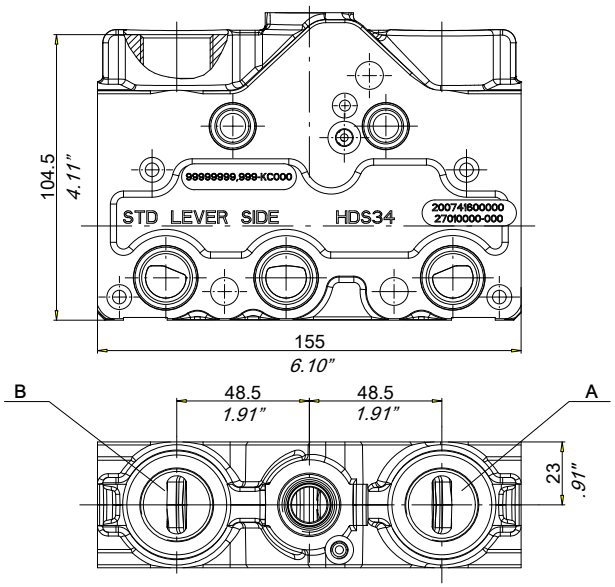

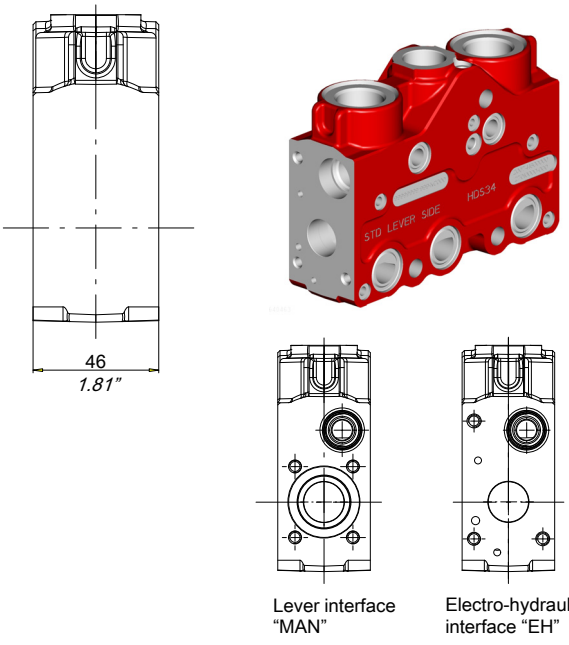

Approximate weight with spool, positioner 349, lever L100, service port valves and check valve: 4,260 kg / *9,39 lbs*

3.3 Ports size

Threads	Standard A/B	On demand
BSP	3/4"	1/2"
UNF	SAE12	SAE10

3.4 Element hydraulic schemes

KU

Without service port valves

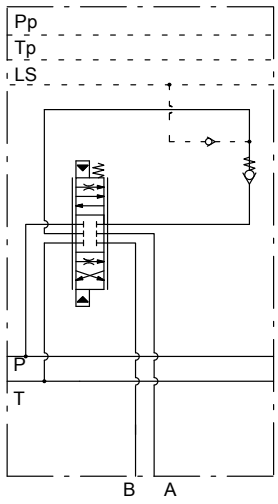

With service port valves

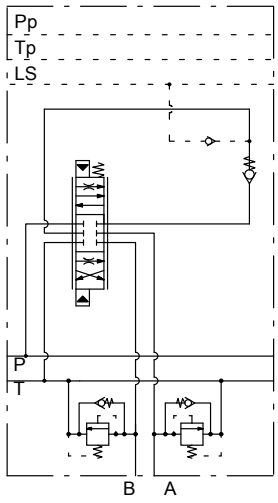

KC

Without service port valves

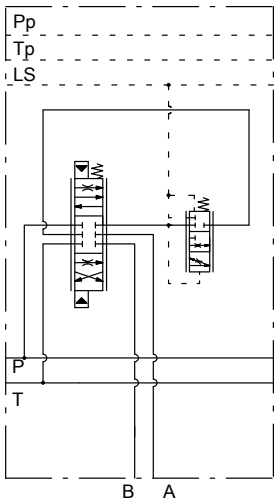

With service port valves

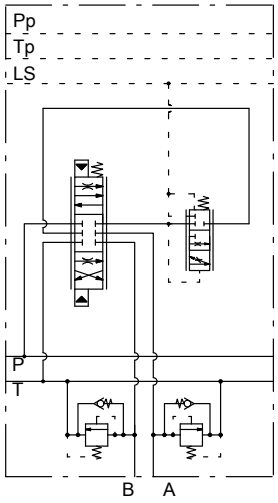

KL

Without service port valves

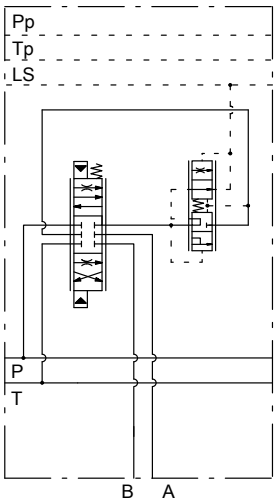

With service port valves

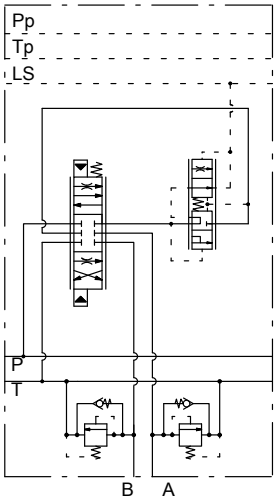

3.5 Seal kit

Seal kit code: 200973801843

KC/KL Versions

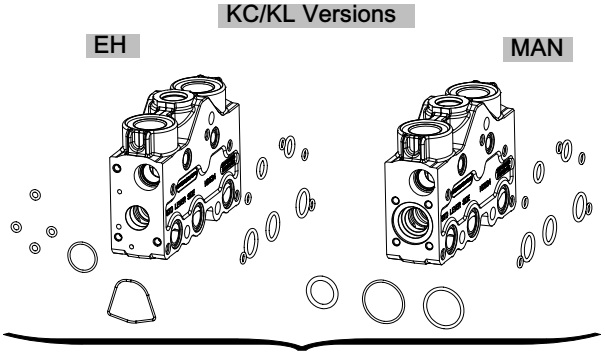

KU Versions

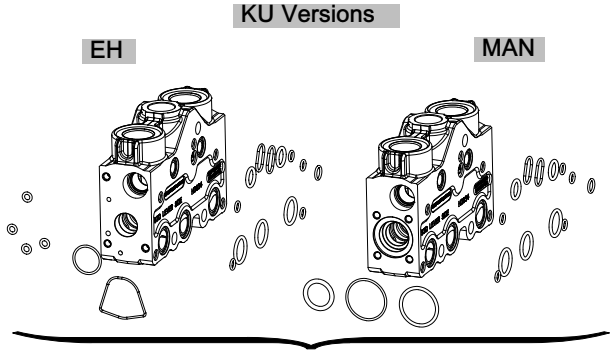

4 Spools

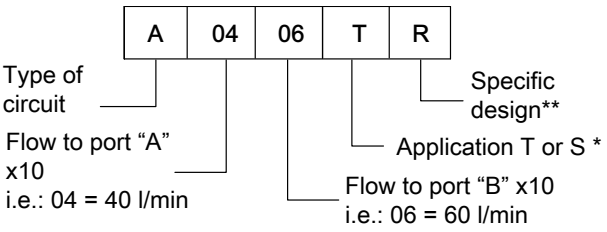

Example of symmetric spool : A1010T
Example of not symmetric spool: A1008T
* T = reduced overlap/high metering spools
S = standard overlap - Low leakage spool to be used in applications without load holding valves
** R = linear metering with soft start for rotation
Note: contact our Sales Dept. for any combination in asymmetrical spools

Ref	Nominal Flow (13 bar margin)
02	15 l/min
03	25 l/min
04	40 l/min
06	60 l/min
08	80 l/min
10	100 l/min
12	120 l/min
15	150 l/min

MAN spool version

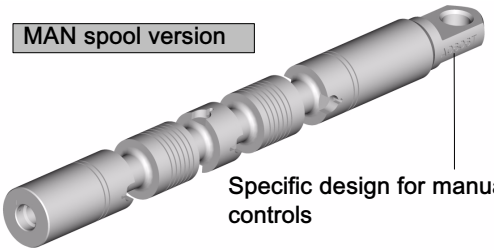

EH spool version

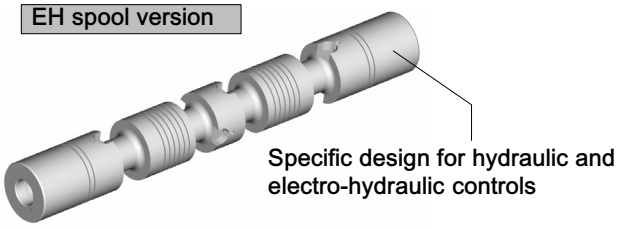

Spool Type	Hydraulic schematic	Features
A	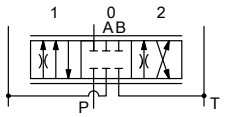	A/B ports closed to tank
C	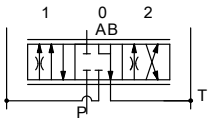	A/B ports connected to tank - Motor spool
D	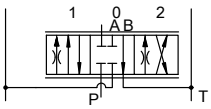	B port connected to tank A port closed
L	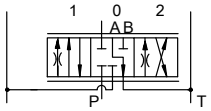	A port connected to tank B port closed
Z	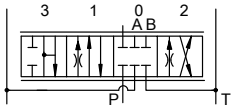	Floating position pulling the spool (for manual controls, only)
W	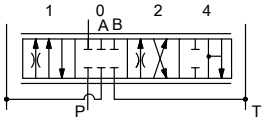	Floating position pushing the spool
S	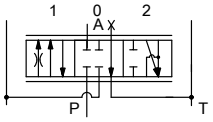	Single effect

4.1 Spools metering

The metering curves have been recorded with the standard pressure margin of 13 bar

Manual spools: T/M

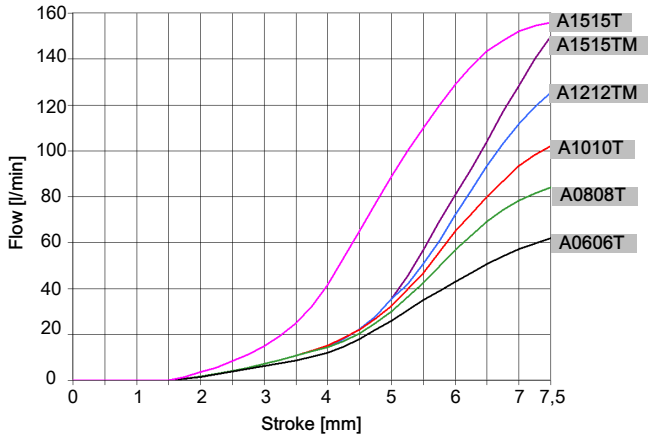

Manual spools: T/TR

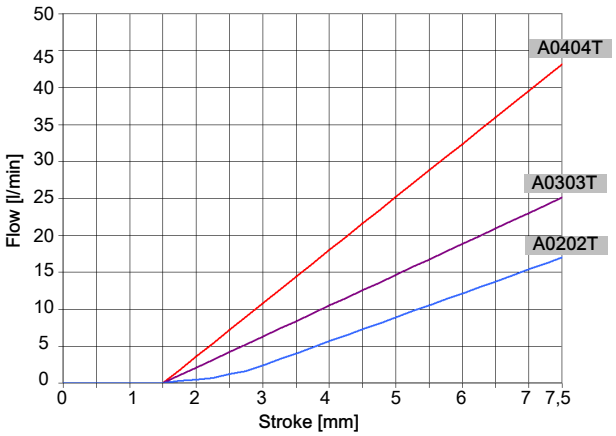

Hydraulic proportional spools: T - EH
Spring type 5 (see 7.6)

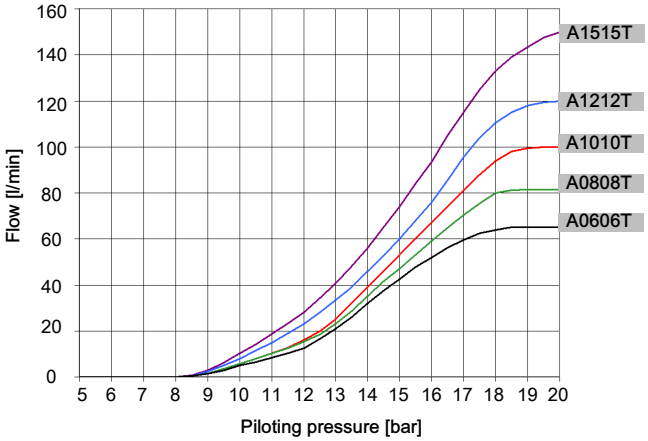

Hydraulic proportional: T/TR - EH
Spring type 5 (see 7.6)

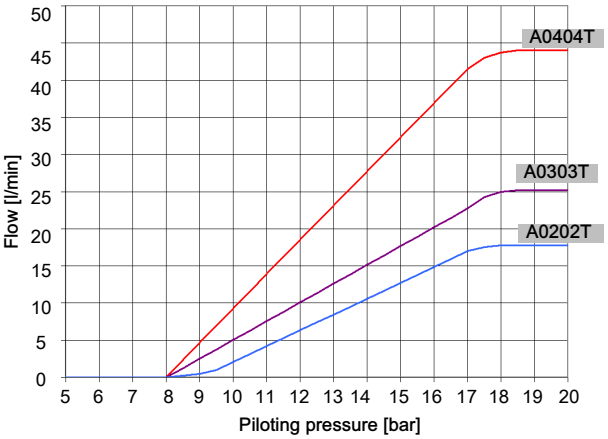

Hydraulic proportional spools: S - EH
Spring type 5 (see 7.6)

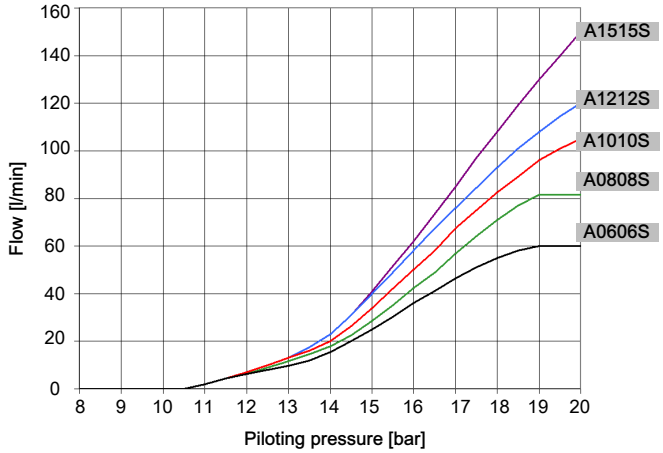

Hydraulic proportional: S - EH
Spring type 5 (see 7.6)

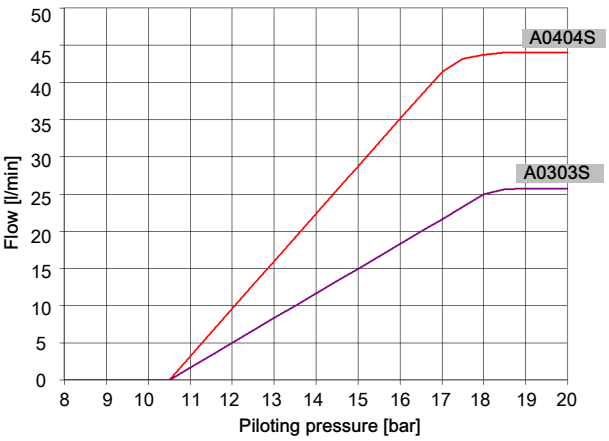

Not symmetric spools

Assembling example

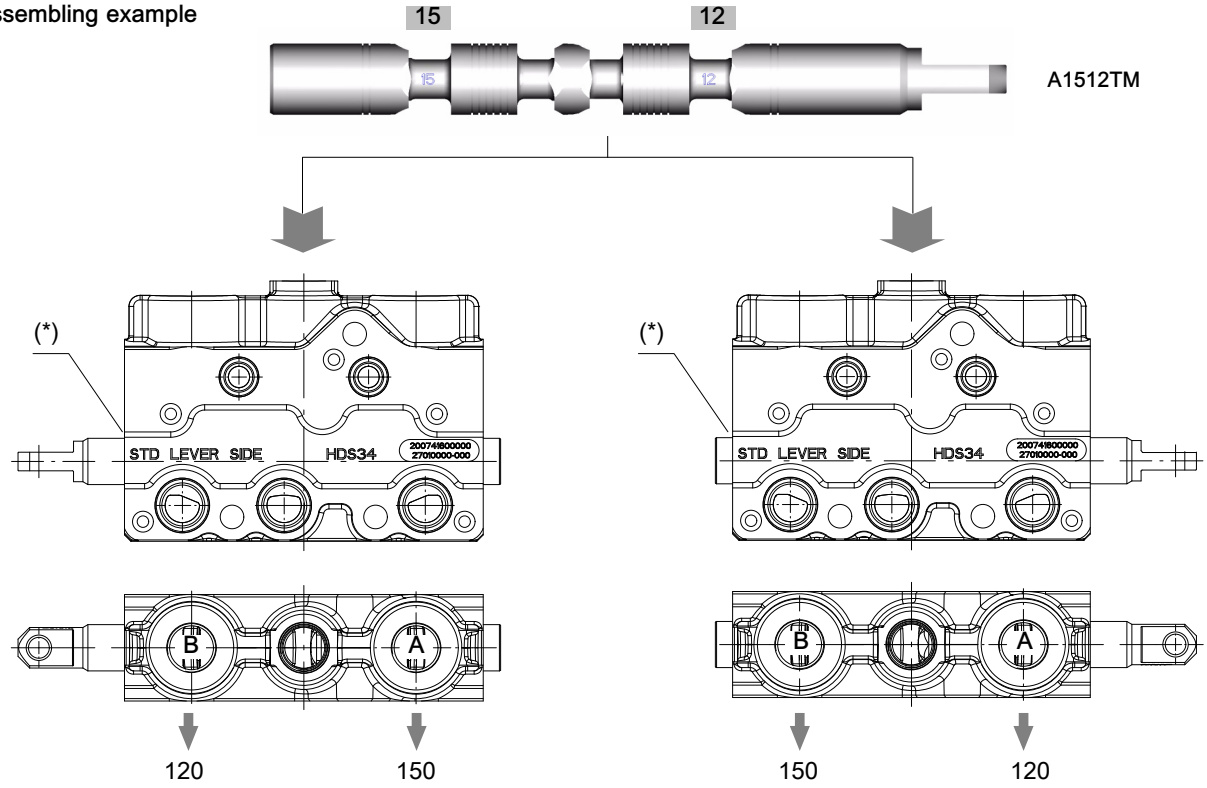

EL.34KC203A1512T....

EL.34KC203A1215T....

B port is always on the standard lever side printed on the body (*)

Note: Contact Sales Dept. for any desired combination

4.2 Pressure drops

Inlet to work port pressure drops

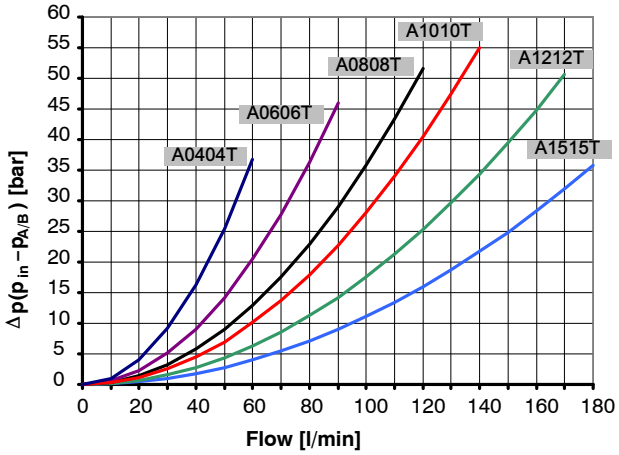

Inlet to LS line pressure drops

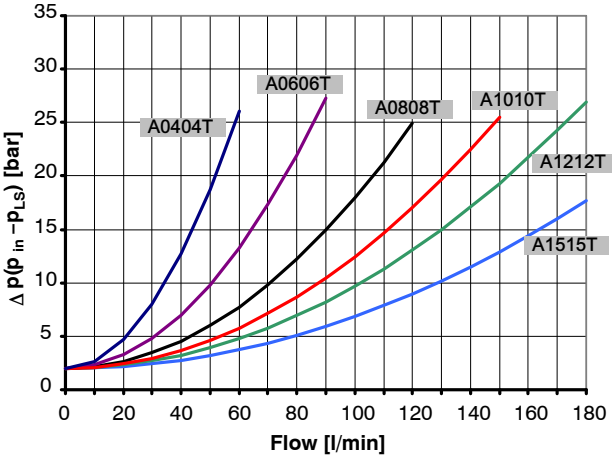

Work port to outlet pressure drops
(with back cover PO... series)

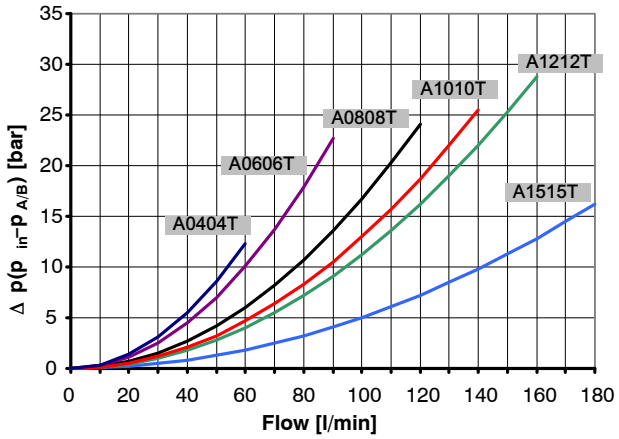

Work port to outlet pressure drops
(with back cover PT... series)

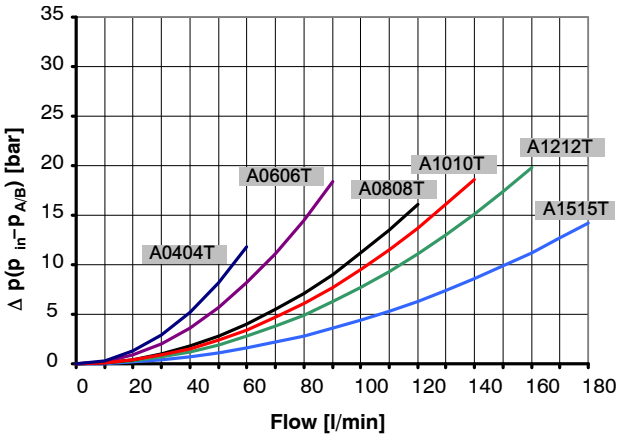

The pressure drop curves have been recorded with the standard spools A type (A and B closed to tank in neutral position).

The pressure drops depend on the size and number of the tank metering notches, therefore for motor spools and application designed spools the pressure drop curves can be different compared to the ones shown in the previous diagrams.

In the following diagrams it is shown, for example, a comparison between the pressure drop curves of A1515T and C1515T.

Inlet to work port pressure drop - Spool type A vs C

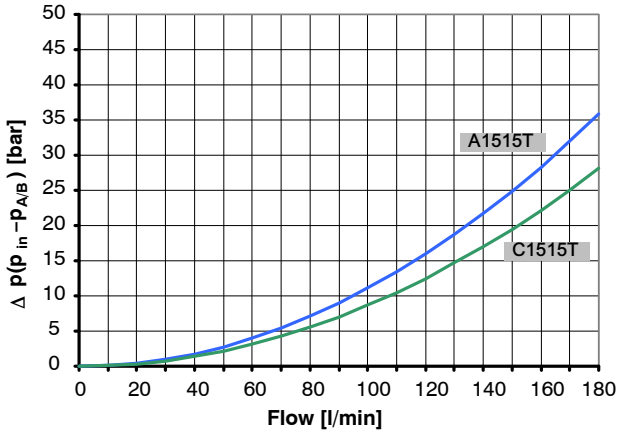

Work port to outlet pressure drop - Spool type A vs C (with backcover PT... series)

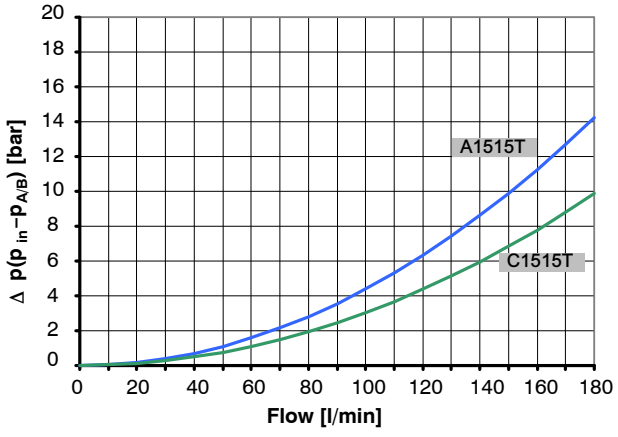

5 Valves

5.1 LS signal adjustable relief valve

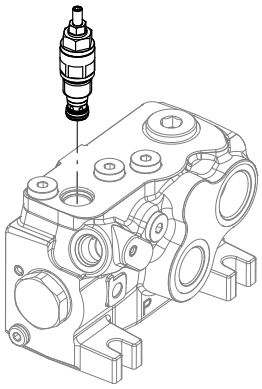

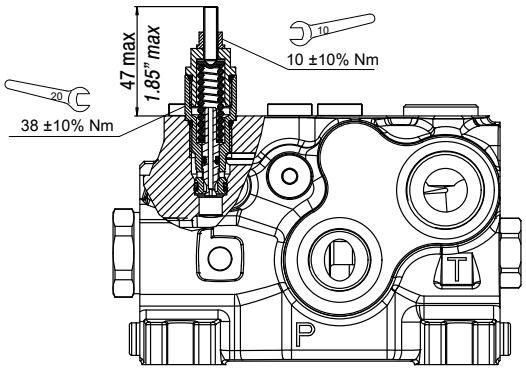

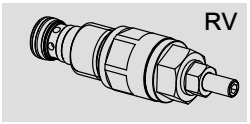

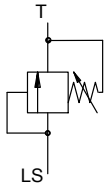

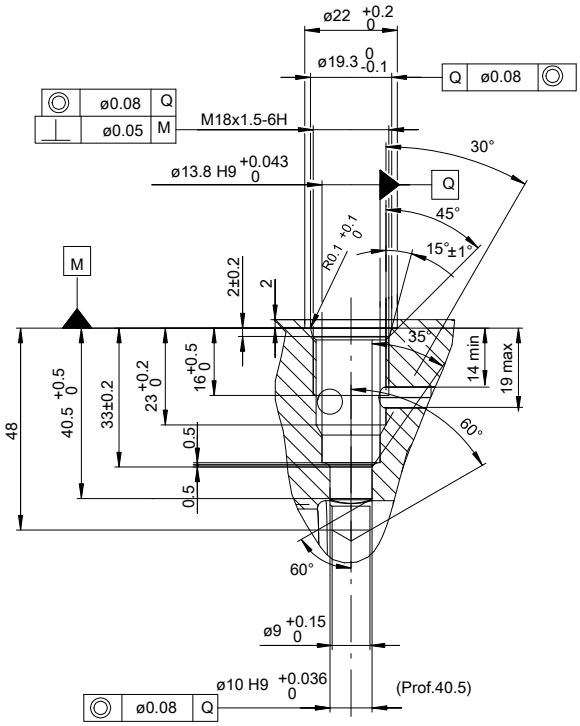

Pressure setting range bar (PSI)	Type	Code
200 - 300 (2900 - 4350)	RV**	200787403283
130 - 200 (1880 - 2900)	RV**	200787403560

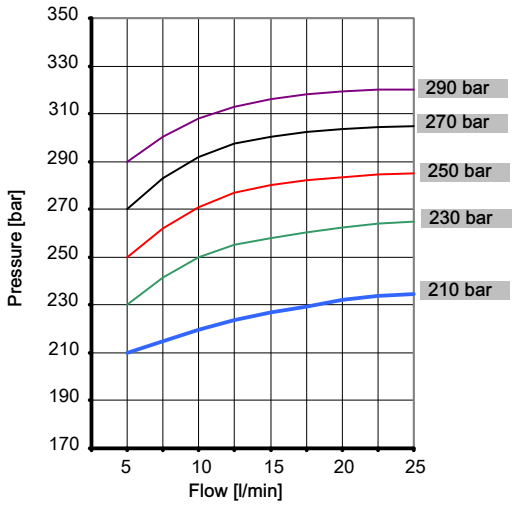

5.2 Pressure reducing valve PRR818

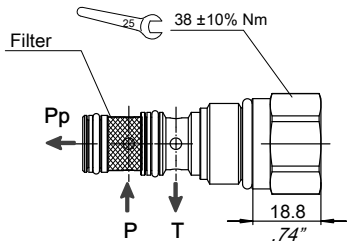

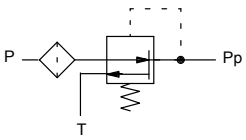

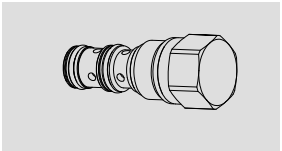

Max operating pressure= 320 bar

Type	Code	Works in combination with	Nominal pressure (bar)
VALV PRR818/25D-F	200533930124	EHC/EHO positioner	25
VALV PRR818/30-F	200533930075	EHO positioner	30

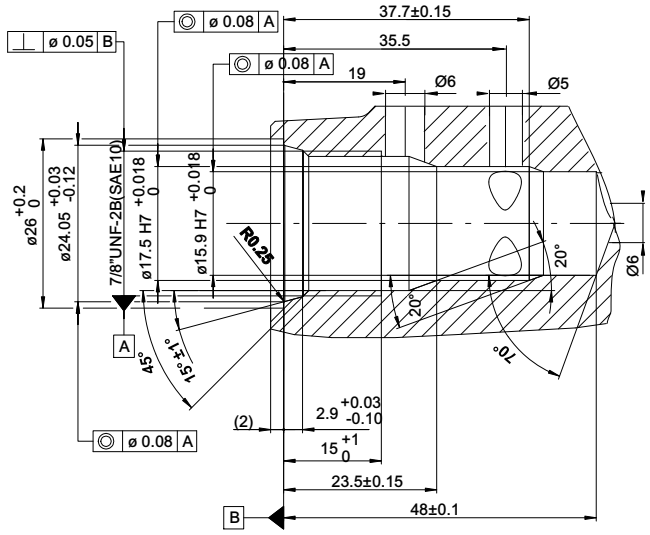

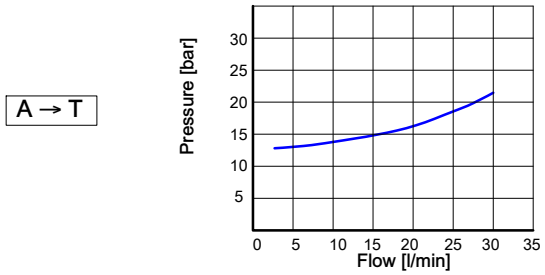

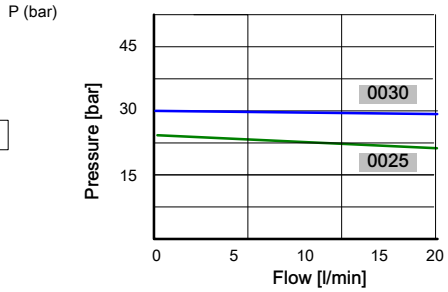

5.3 Anti-shock and anti-cavitation valves UC

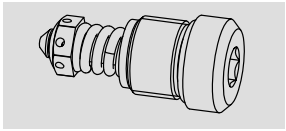

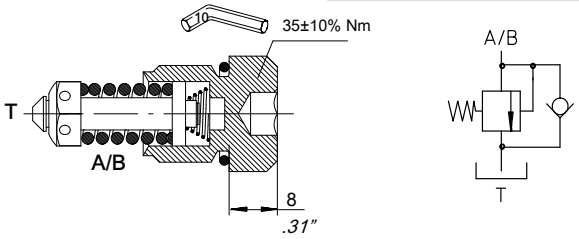

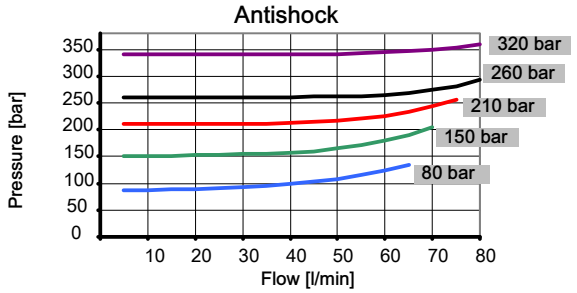

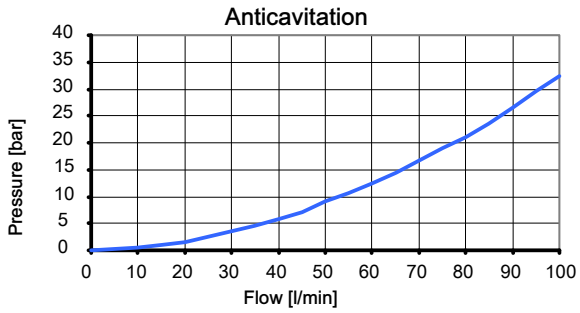

IMPORTANT!: The UC anti-shock valve is designed to absorb shock effects. Therefore, it should not be used as pressure relief valve

The dedicated cavity is machined on request only

For the cavity see chapter 5.1

Pressure setting at 10 l/min (*) bar *(PSI)*	Code
40 *(580)*	200533930068
60 *(870)*	200533930077
70 *(1010)*	200533930050
80 *(1160)*	200533930050
90 *(1300)*	200533930084
100 *(1450)*	200533930100
110 *(1590)*	200533930110
120 *(1740)*	200533930085
130 *(1880)*	200533930057
140 *(2030)*	200533930059
150 *(2170)*	200533930051
160 *(2320)*	200533930067
170 *(2460)*	200533930071
180 *(2610)*	200533930056
190 *(2750)*	200533930113
200 *(2900)*	200533930060
210 *(3040)*	200533930080
220 *(3190)*	200533930064
230 *(3330)*	200533930058
240 *(3480)*	200533930081
250 *(3620)*	200533930052
260 *(3770)*	200533930065
270 *(3910)*	200533930066
280 *(4060)*	200533930053
290 *(4200)*	200533930069
300 *(4350)*	200533930079
320 *(4640)*	200533930054
340 *(4930)*	200533930055
380 *(5510)*	200533930083
VC (plug)	200778400310

(*) For different pressure settings please contact our Sales Department

5.4 Anti-cavitation valves C

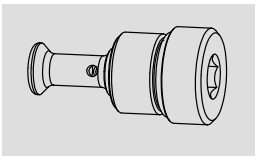

Type	Code
C	200787602560
VC (plug)	200778400310

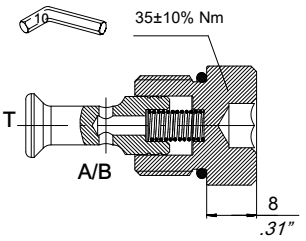

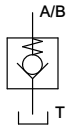

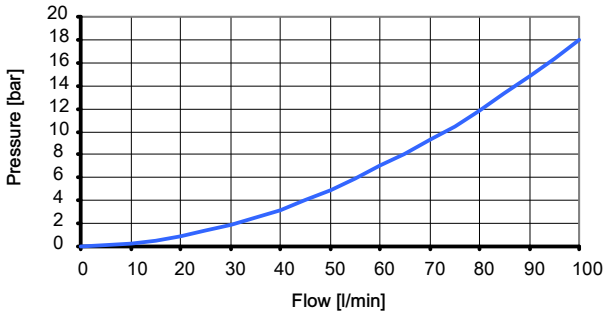

The dedicated cavity is machined on request only
For the cavity see chapter 5.1

5.5 LS signal normally open unloading valve (SPF)

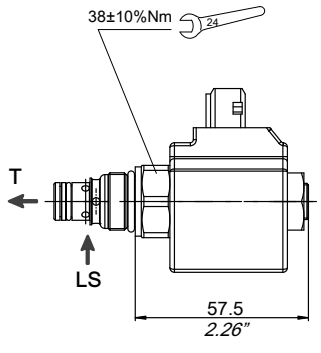

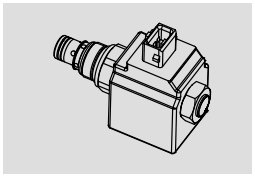

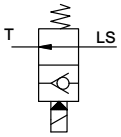

Mechanical part only	Solenoid
200542300012	See 5.9

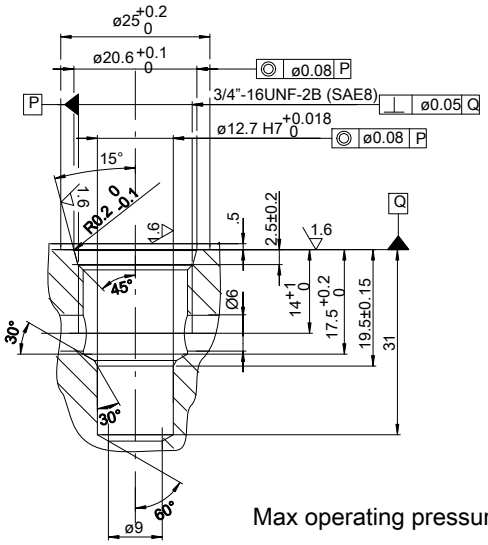

Max operating pressure= 350 bar

5.6 LS signal normally open unloading valve with manual override (SPE)

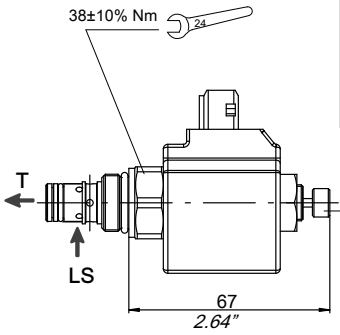

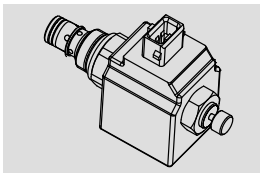

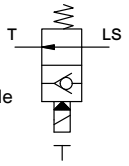

Mechanical part only	Solenoid
200542300013	See 5.9

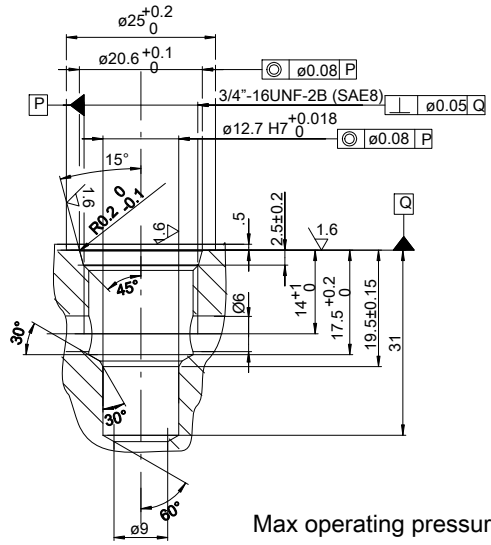

Max operating pressure= 350 bar

5.7 LS signal normally closed unloading valve (SPF normally closed)

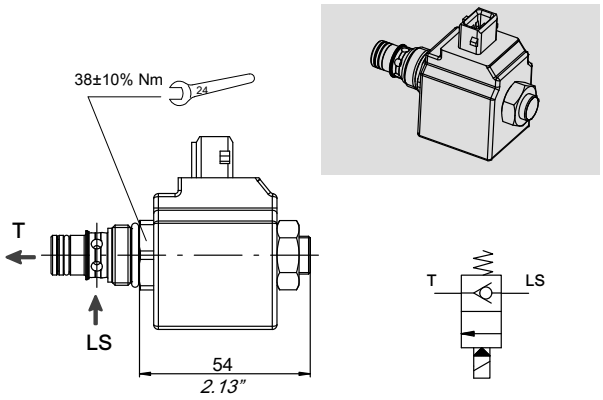

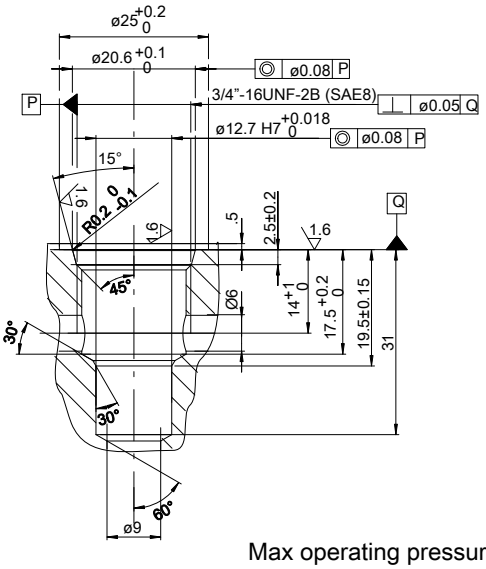

Mechanical part only	Solenoid
200542300014	See 5.9

Max operating pressure= 250 bar

5.8 Pilot oil supply cut-off valve

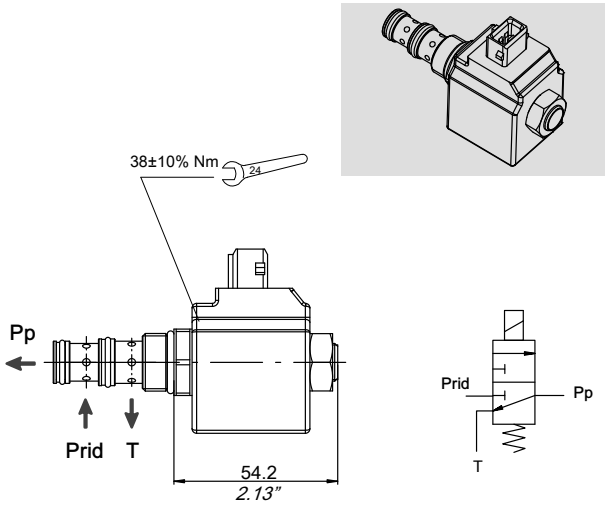

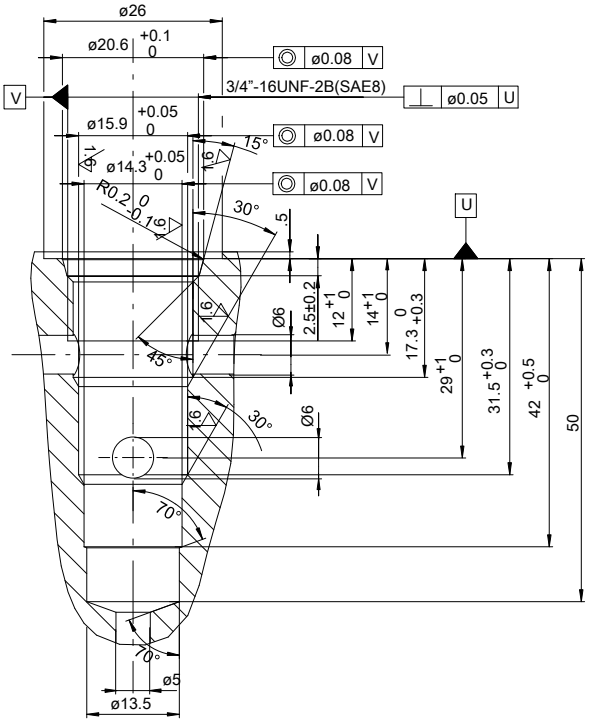

Type	Mechanical part only	Solenoid Code
SD817/3CN	200542310010	See 5.9

5.9 Coils for solenoid valves

DIN connector

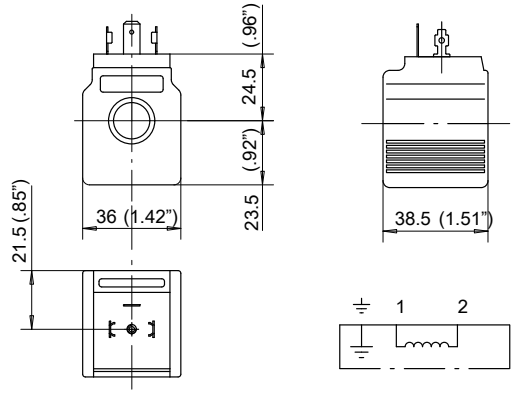

AMP connector

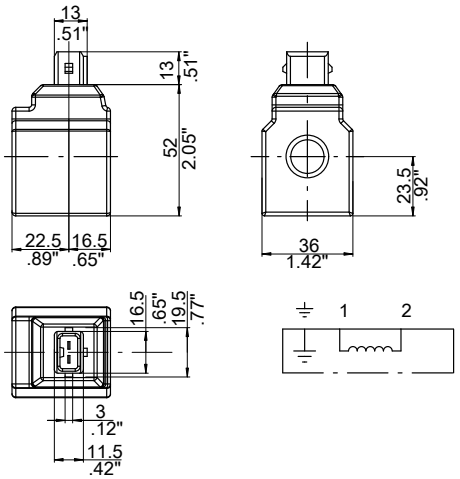

AMP connector

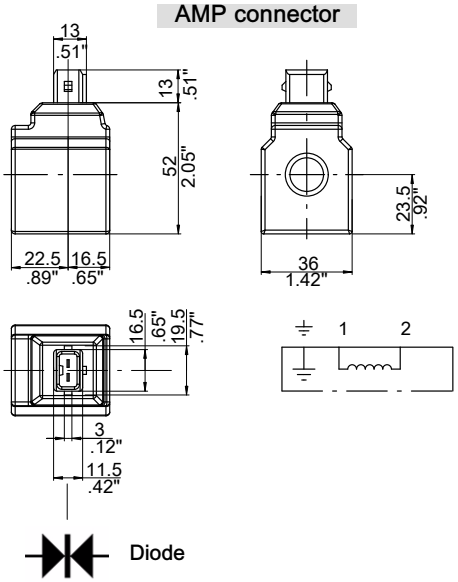

Diode

For solenoid valve series	
Wire class	H (VDE0580)
Protection	IP65 (DIN40050)
Coil insulation	F
Duty rating	ED 100%
Voltage tolerance	± 10%

Connector style	Nominal Coil voltage	Power (Watt)	Resistance (Ohm) **Ambient temp.**	Current (Ampere) **Ambient temp.**	Coil code
DIN	12 V. DC.	27.2	5.3	2.2	200674910100
	24 V. DC.	27	21.3	1.12	200674920080
AMP	12 V. DC.	27.2	5.3	2.2	200674910250
	24 V. DC.	27	21.3	1.12	200674920200
AMP + DIODE	12 V. DC.	21	6.85	1.75	200541210032
	24 V. DC.	21	27	0.78	200541210033

5.9.1 Connector for DIN type solenoids

Code 200544110009

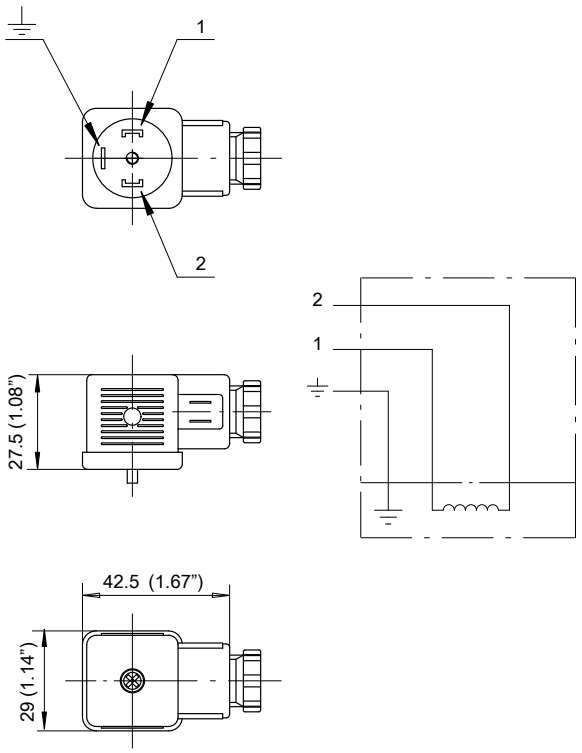

For power input	D.C.
Connector type	DIN 43650
Number of poles	2 + ⏚
Supply voltage	max. 220 V.
Nom. capacity at contacts	10 A.
Max capacity at contacts	16 A.
Resistance at contacts	≥ 4 mOhm
Max section of cable	1.5 mm^2
Outer material	Glass fibre reinforced Nylon
Contact mount material	
Color	Black
Armour clamp	Pg 9
Ø cable	6-8 mm.
Protection factor	IP65 (DIN40050)
Insulation class	C (VDE0110)
Temperature range	-40 / +90 °C

5.10 LS signal flow compensated drain valve (VRC)

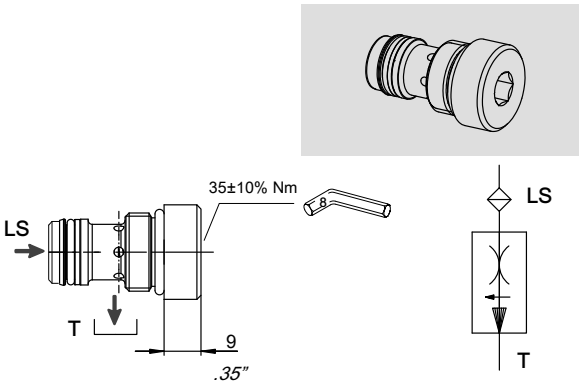

Type	Code
VALV VRC D. 0,7	200787202102
VALV VRC D. 0,5	200787202320

5.11 LS line manual shut-off valve (NV1)

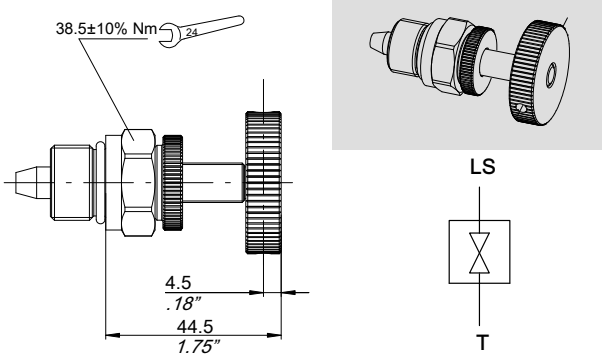

Type	Code
VALV NV1	200787602970

To close the LS signal drain line only when the valve is fed through a hand pump (emergency function).
Supplied normally open. Approximately 4 turns to close.

5.12 Direct acting proportional pressure reducing valve / ON-OFF directional valve

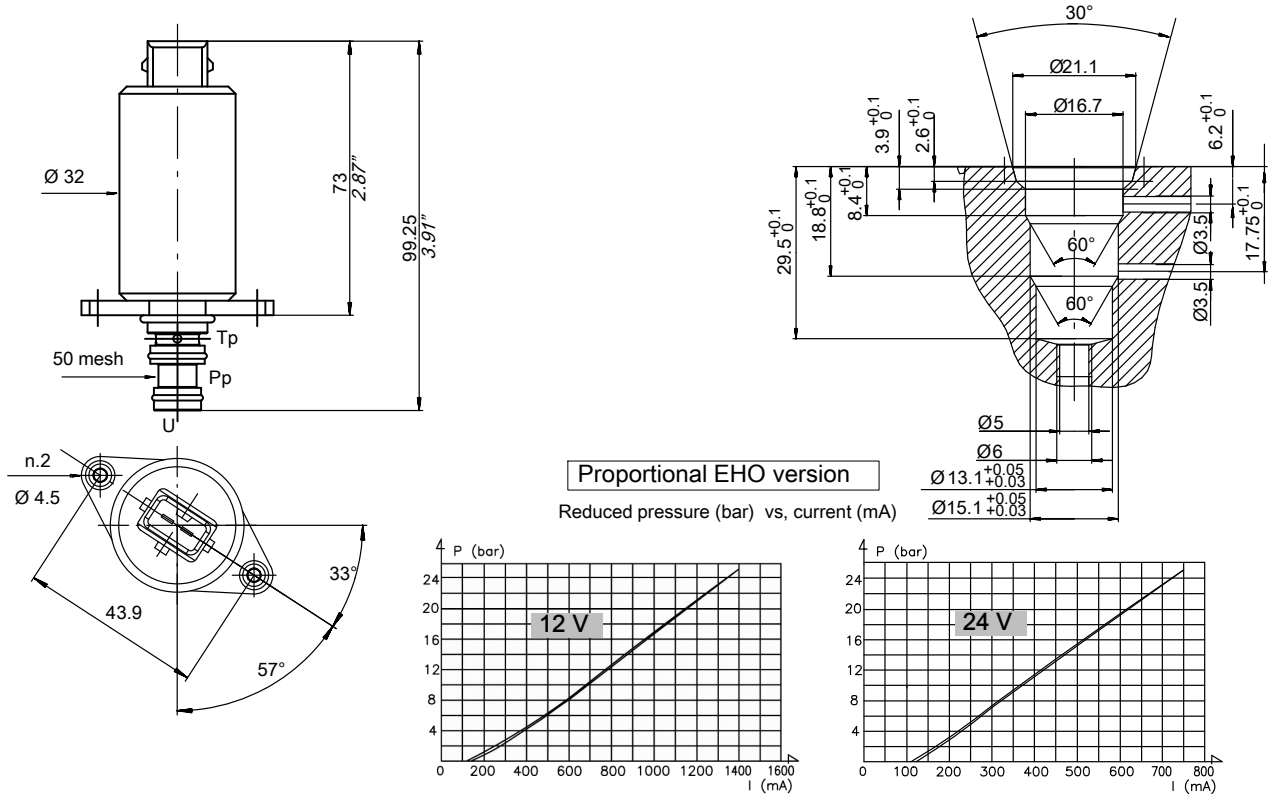

Electro-hydraulic specifications			
	Proportional 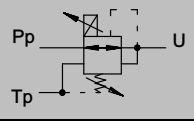		ON-OFF 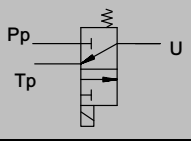
Nominal flow rate	4 l/min *(1 GPM)*		6 l/min *(1.5 GPM)*
Max inlet pressure	35 bar *(500 PSI)*		50 bar *(750 PSI)*
Reduced pressure tolerance	±5%		-
Rated supply voltage	12 VDC	24 VDC	12 VDC ±10%
Current supply characteristic	PWM (Pulse width modul.)		ON-OFF
Superimposed dither frequency	100 to 150 Hz		-
Degree of protection	IP65		
Max power consumption	11 W	14 W	20 W
Coil resistance (at 20°C)	5.4 Ohm	22 Ohm	7.2 Ohm
Response time	< 80 ms		from 30 to 45 ms
Leakage	< 15 cc/min. at 35 bar and 80°C *(< 0.9 cu:in./min. at 500 psi and 176 °F)*		
Duty cycle	ED 100%		
Connector Type	AMP Junior timer (AMP84-9419)		
Connector colour	BLUE	RED	BLACK
Code (*)	200533960004	200533960007	200533940075

(*) nr. 2 screws M4x12 are not included

For proportional versions, ED100% not guaranteed for current values higher than the maximum shown in the correspondent diagram.

For ED100% without current limitation the ON-OFF version must be used

6 Levers

6.1 Standard lever group

Code: 200707120570

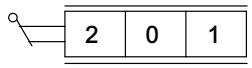

3 - 4 floating stroke
1 - 2 standard stroke

L100

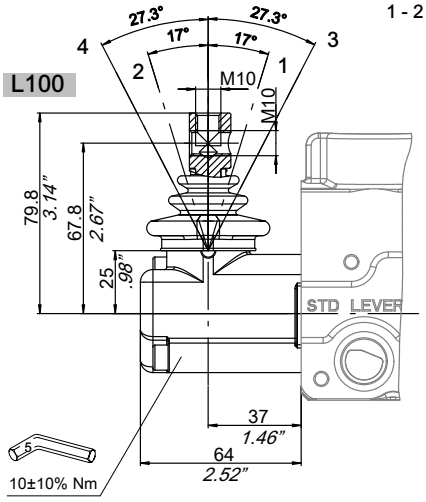

L300

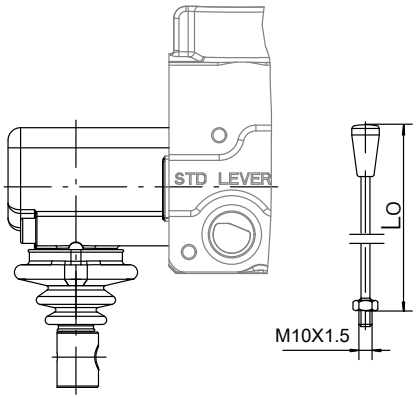

Body Interface	Spool type
Manual	Manual

Lo		Type	Code
mm	inches		
185	7.28	**AL001**	200702220010
250	9.84	**AL002**	200702220030
300	11.81	**AL003**	200702220040
350	13.78	**AL004**	200702220050

6.2 Free end spool with dust proof seal

Code: 200707190030

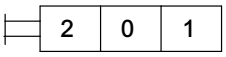

L55

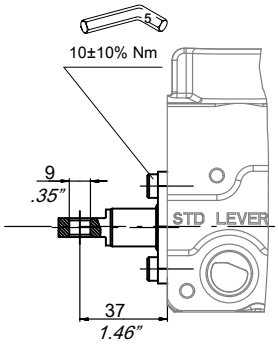

6.3 Standard joystick control

Code: 200775930360

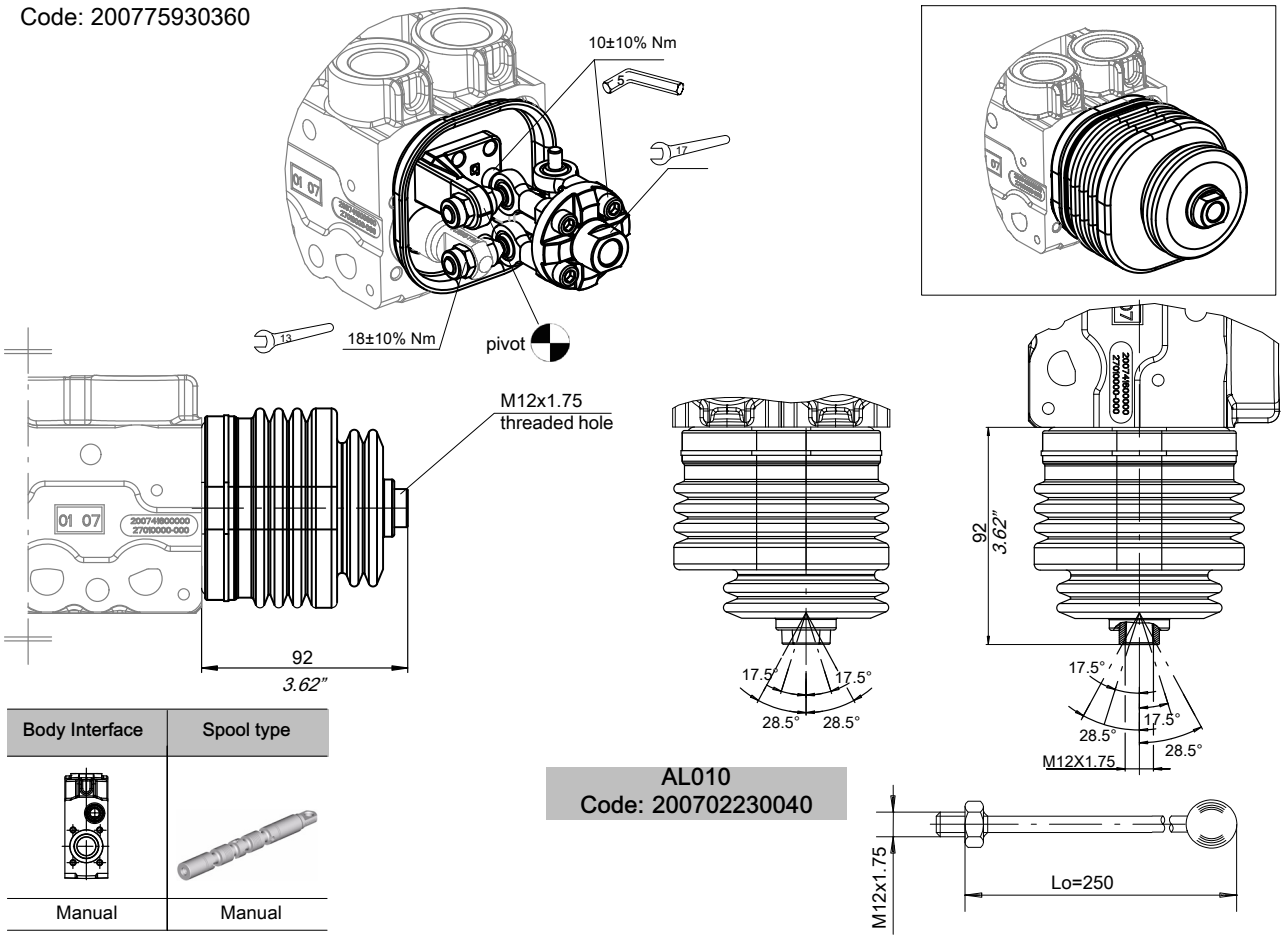

Body Interface	Spool type
Manual	Manual

AL010
Code: 200702230040

Pivot

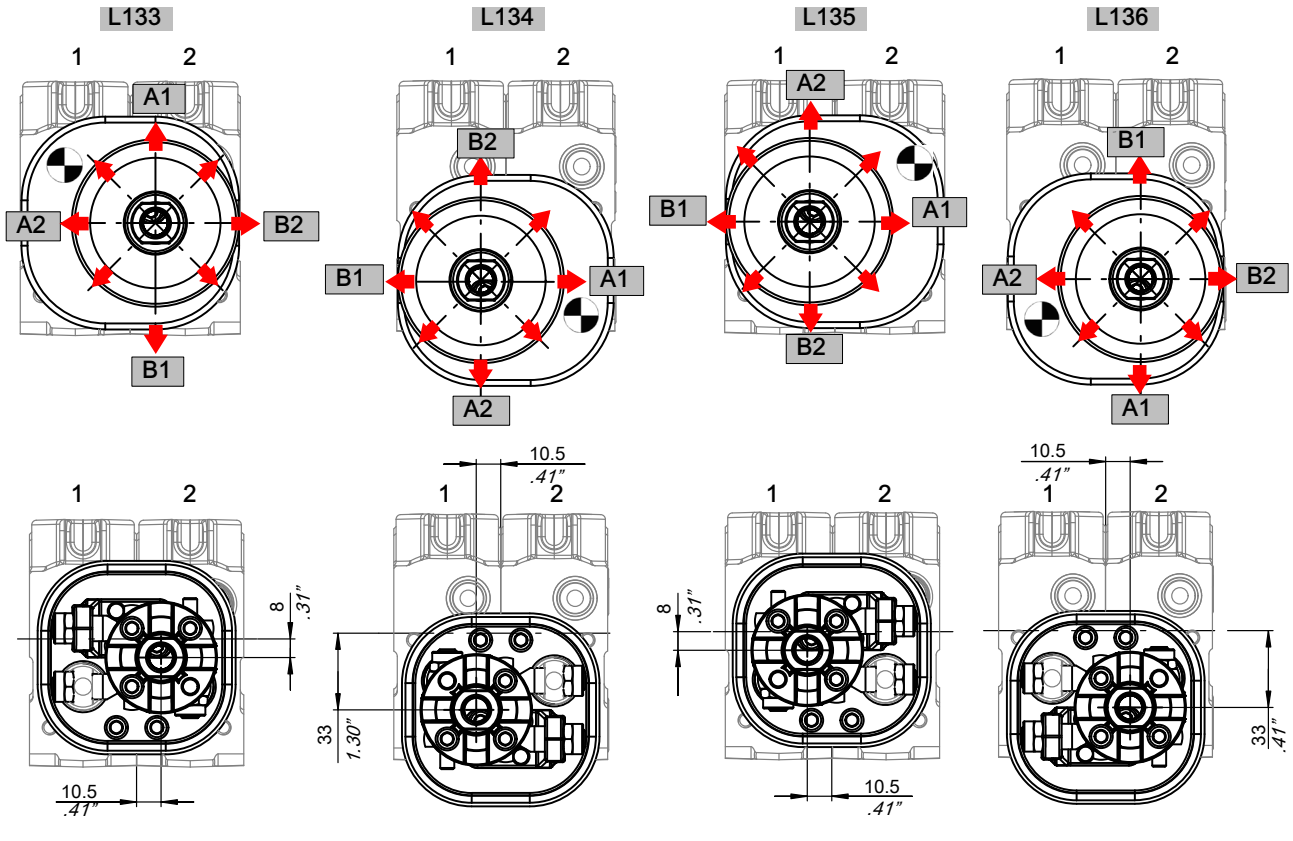

6.4 Joystick control with integrated locking system

Code: 200775930400

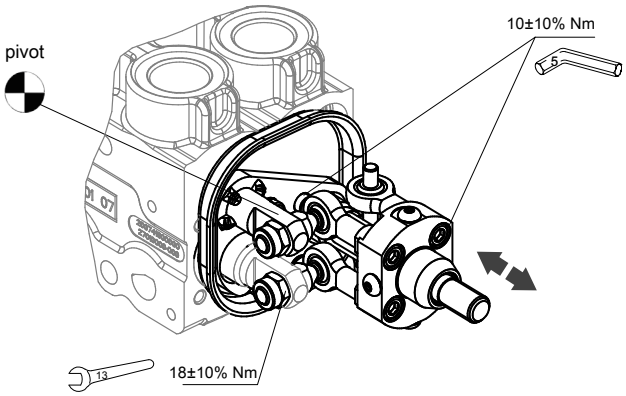

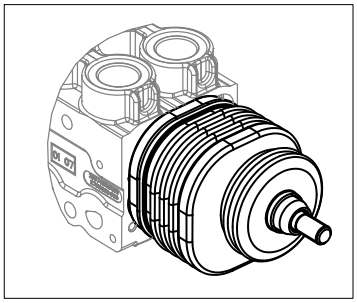

Body Interface	Spool type
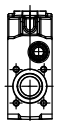	
Manual	Manual

L260

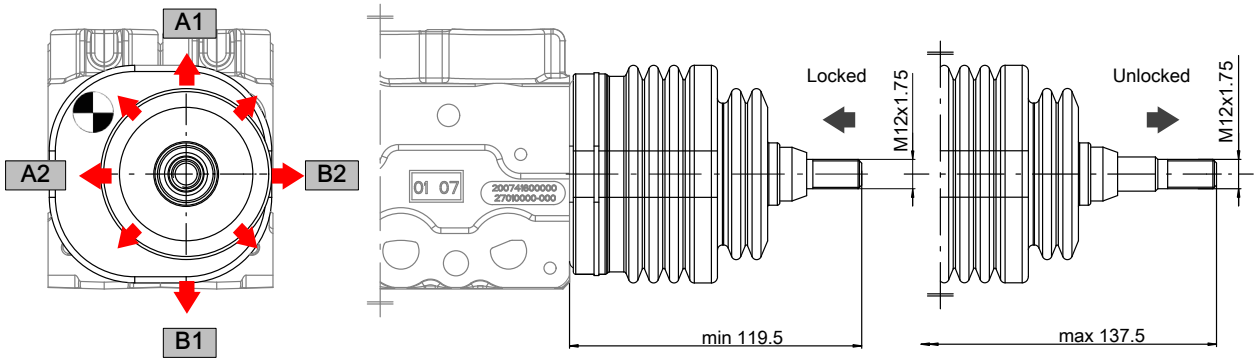

L460

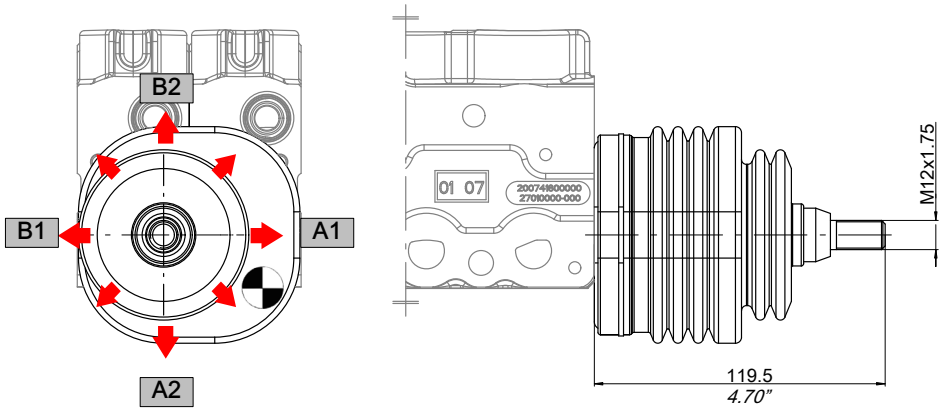

6.5 Pressurised positioner and lever caps (EHO - EHC functions)

Max operating pressure 35 bar

L	P	0	3
L			

0 = without lever adaptor
P = with lever adaptor
A = with lever adaptor and adjustable stroke

Type:
01 = in combination with EHO positioner
03 = in combination with EHC positioner
04 = in combination with EHC positioner predisposed for lever adaptor (not included)

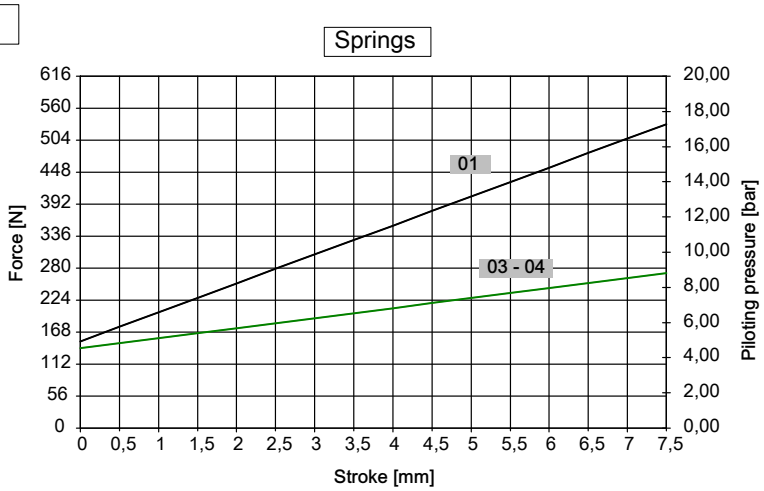

6.5.1 Pressurised cap type L0**

Code L001: 200707190300 (EHO)
Code L003: 200707190320 (EHC)

2	0	1

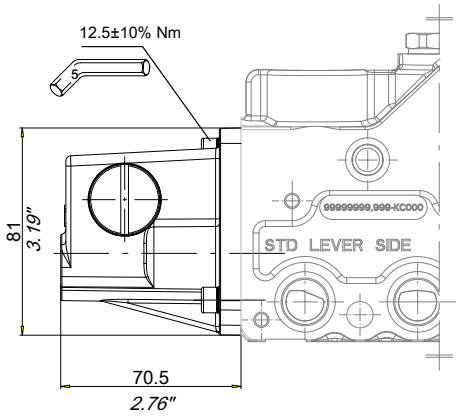

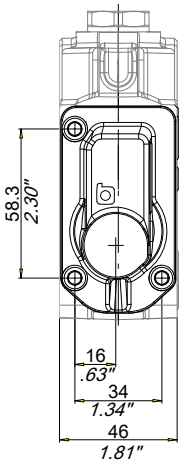

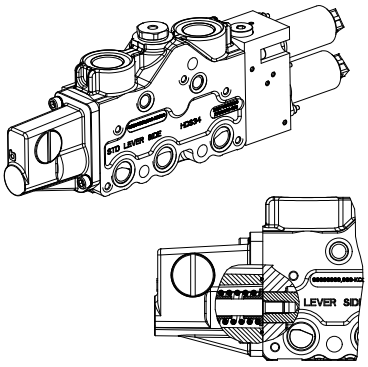

Body Interface	Spool type
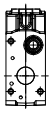	
Electro-hydraulic	EH

6.5.2 Pressurised cap LP04- Predispose for lever adaptor (not included)

Code: 200707190330 (EHC)

2	0	1

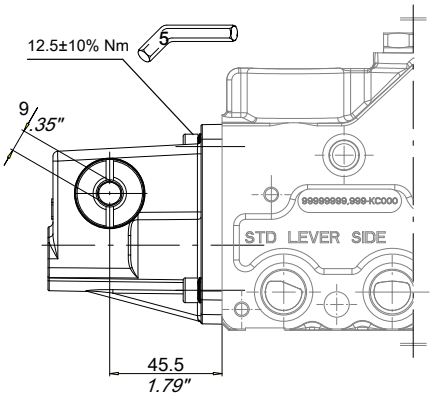

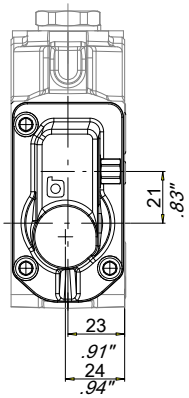

Body Interface	Spool type
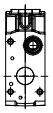	
Electro-hydraulic	EH

6.5.3 Pressurised cap L0**/LP** with additional port

2	0	1

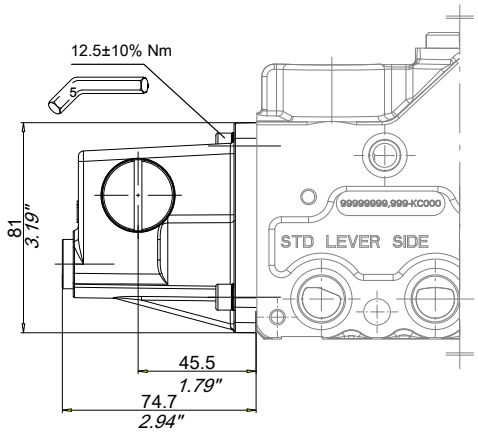

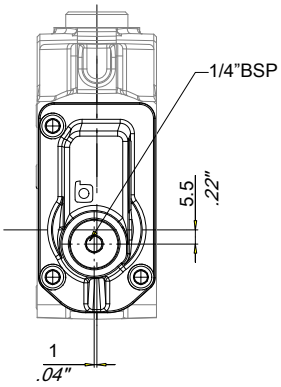

Body Interface	Spool type
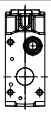	
Electro-hydraulic	EH

Additional port, for example, to feed low pressure piloted load control valves with proportional reduced control pressure.
For this option please contact our Sales Department.

6.5.4 Pressurised floating cap L004

Code: 200707190350 (EHO)

2	0	1	3

Body Interface	Spool type
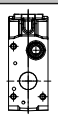	
Electro-hydraulic	EH

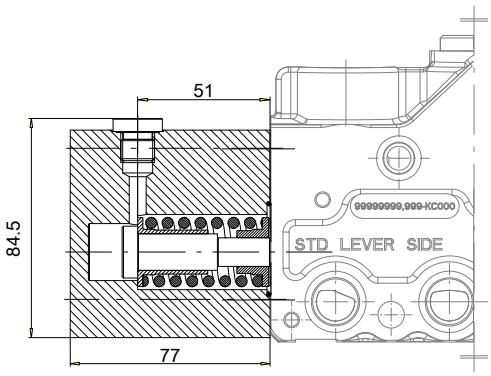

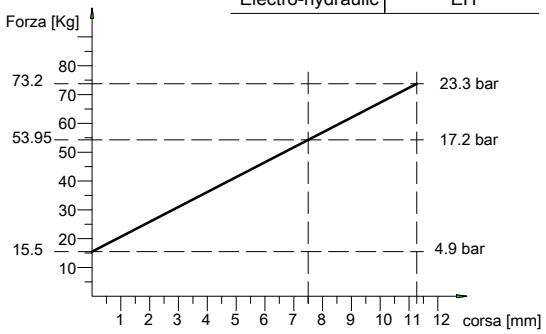

6.5.5 Pressurised cap LP** - With lever adaptor

Code LP01: 200707110350 (EHO)
Code LP03: 200707110390 (EHC)

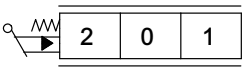

Body Interface	Spool type
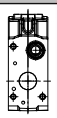	
Electro-hydraulic	EH

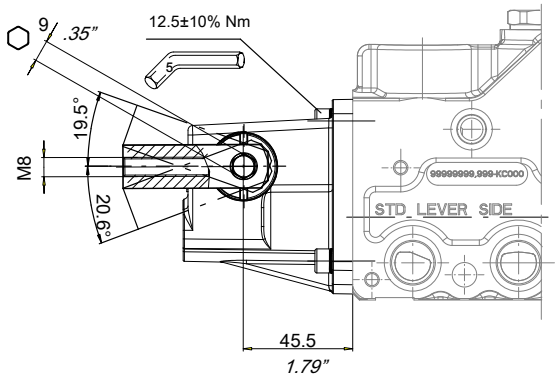

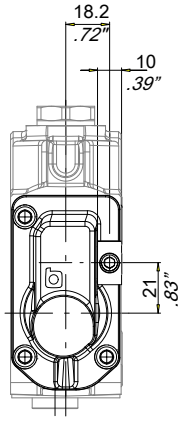

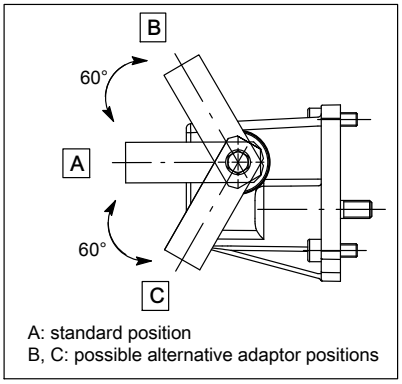

A: standard position
B, C: possible alternative adaptor positions

6.5.6 Pressurised cap LA** - With lever adaptor + adjustable spool stroke

Code LA01: 200707110360 (EHO)
Code LA03: 200707110450 (EHC)

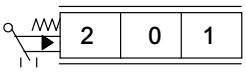

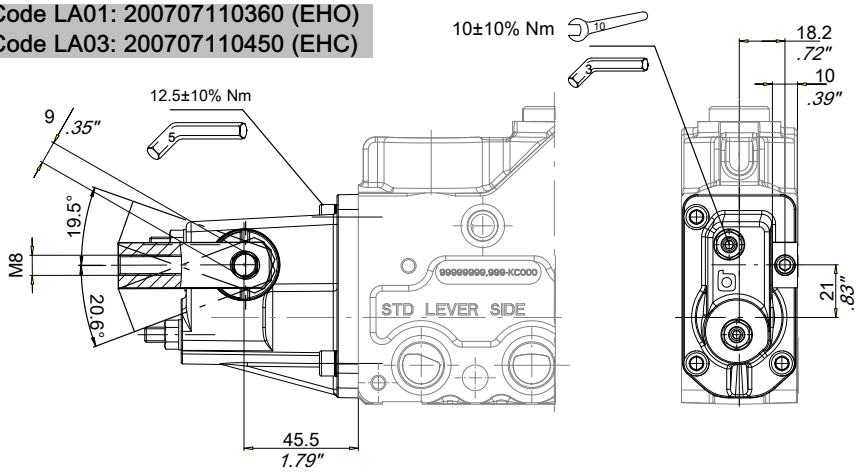

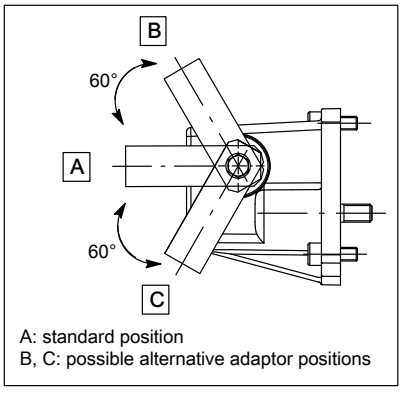

A: standard position
B, C: possible alternative adaptor positions

6.5.7 Max admitted lever force/torque for all the lever versions

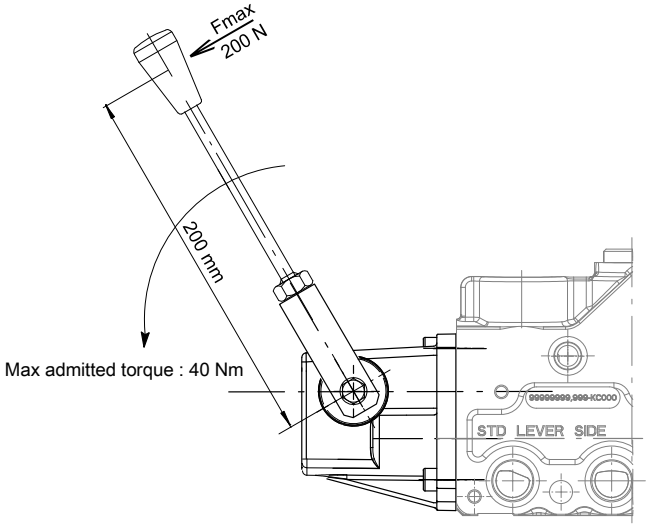

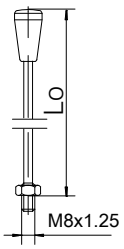

Lo		Type	Code
mm	inches		
150	5.90	AL001	200702210190
200	7.87	AL002	200702210030
250	9.84	AL003	200702210050
300	11.81	AL004	200702210060

7 Positioners

7.1 Spring return to neutral position

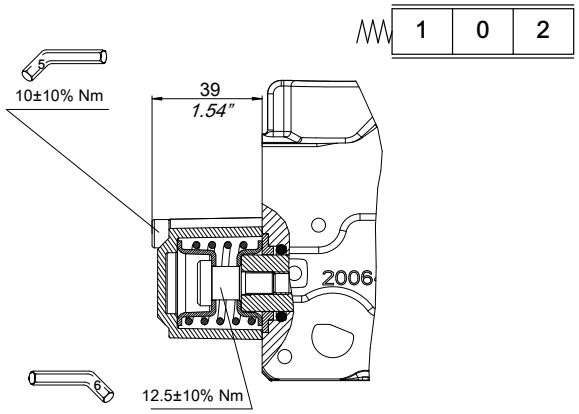

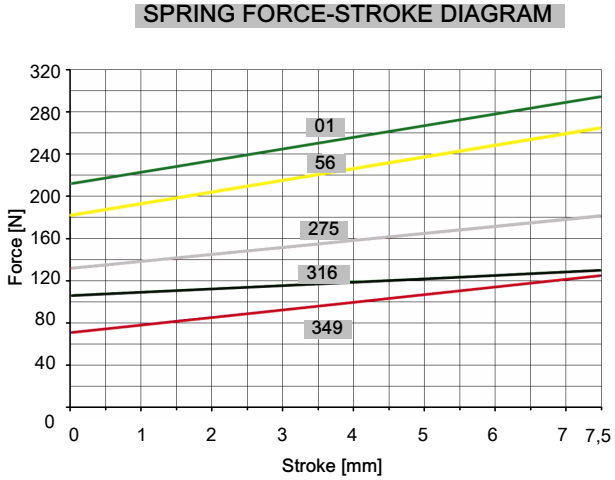

Type	Code	Spring	Colour
349	200768611811	200662402330	RED
316	200768611681	200662402430	BLACK
56	200768610861	200662402410	YELLOW
01	200768610021	200662402460	GREEN
275	200768611331	200662402450	WHITE

Body Interface	Spool type
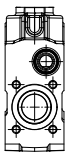	
Manual	Manual

7.2 Detent in floating position and spring return to neutral from position 1 and 2

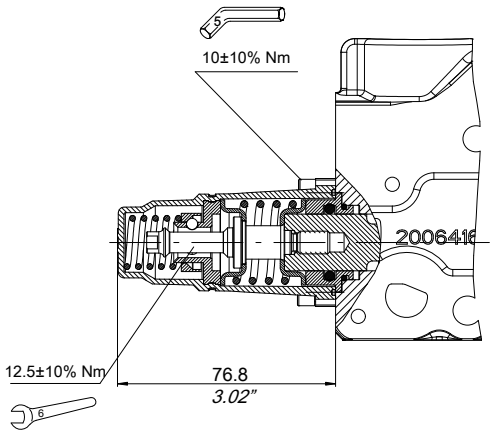

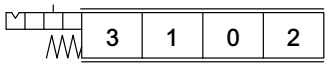

Body Interface	Spool type
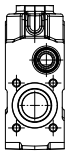	
Manual	Manual

Type	Code	Main spring	Detent spring
04	200768640780	RED	BLACK

7.3 Electro-magnetic detent (EMD)

A pre-feeling (force increase) signals the operator that the detent position is going to be engaged

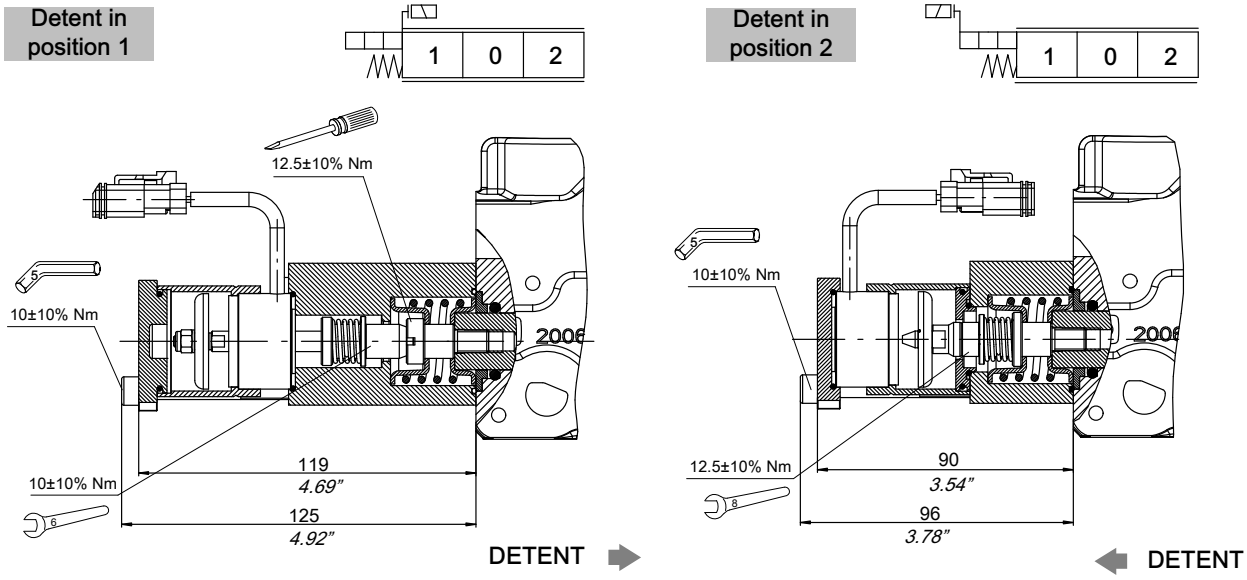

7.3.1 Operating features

COIL

Nominal voltage: 12 VDC ± 10%
Power rating: 7 W
Electrical resistance when holding (20°C): 21 ± 1.5 Ohm:
Min. solenoid axial hold force: 260 N
Duty cycle: 100%
Standard cable length: 500 mm

Body Interface	Spool type
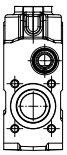	
Manual	Manual

Type	Code	Spring	Voltage	Min. holding force	Connector	Detent position
336	200768670120	RED	12 VDC	137 N	DEUTSCH DT06-2S	2
363	200768670130	RED	12 VDC	137 N	DEUTSCH DT06-2S	1

7.4 Microswitch positioners

7.4.1 Spool movement detection

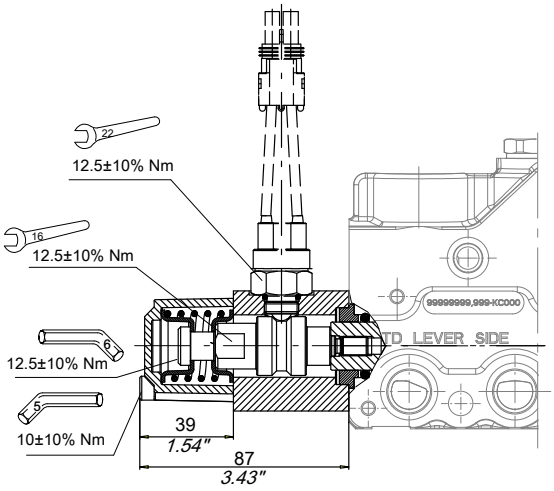

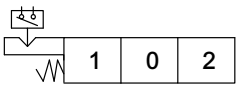

Body Interface	Spool type
Manual	Manual

DE: microswitch operated in both directions

SE1: microswitch operated in POS.1

SE2: microswitch operated in POS.2

7.4.2 Spool direction detection

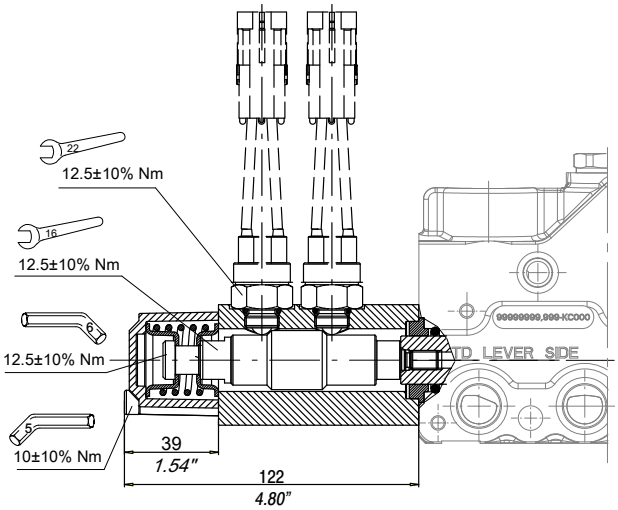

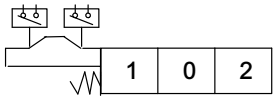

Microswitch control	
Current rating	.01 - 5.0 DC Amp
Voltage rating	5.0 - 24.0 VD C
Mechanical life	500.000 cycles
Temperature range	-30 to 120° C
The normally closed version is available too.	

Type	Code	Hydraulic scheme	Description	Connector type	
SAE6 C21-478	200544124021		Normally Closed, Encapsulated with Wire Leads	Packard Weather Pack	
SAE6 O21-477	200544124022		Normally Open, Encapsulated with Wire Leads	Packard Weather Pack	
SAE6 O21-467	200544124023		Normally Open, Encapsulated with Wire Leads, Convoluted nylon wire shield	Packard Metri-pack	
SAE6 C21-462	200544124027		Normally Closed, Sealed Terminals	Packard Weather Pack	

7.5 Electro-mechanic locking system

With manual override

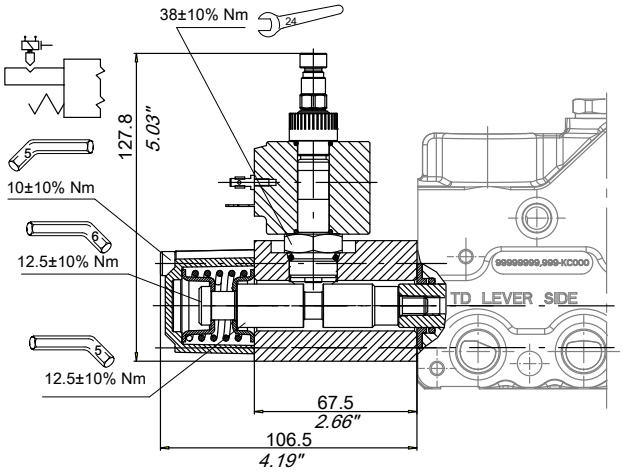

Without manual override

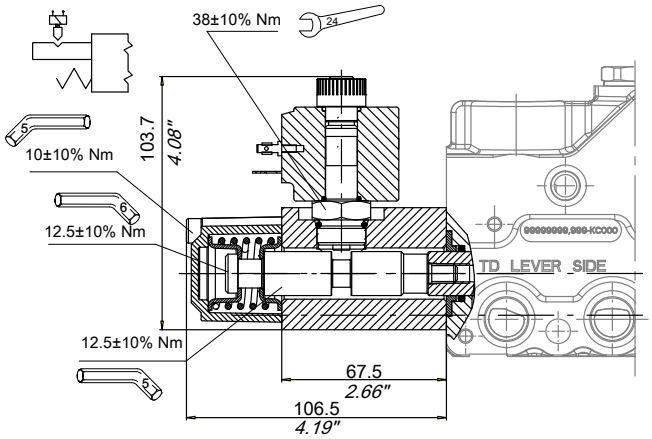

Type	Code	Spring	Manual override	Complete code with coil
369	200768690120	WHITE	Y	27W HC (See section 5.9)
368	200768690110	WHITE	N	27W HC (See section 5.9)

For different types of coils see 5.9 and contact our Sales Department

For different types of springs see section 7.1

7.6 Hydraulic controls

Pmax= 40 bar *(580 PSI)*

POS50-60

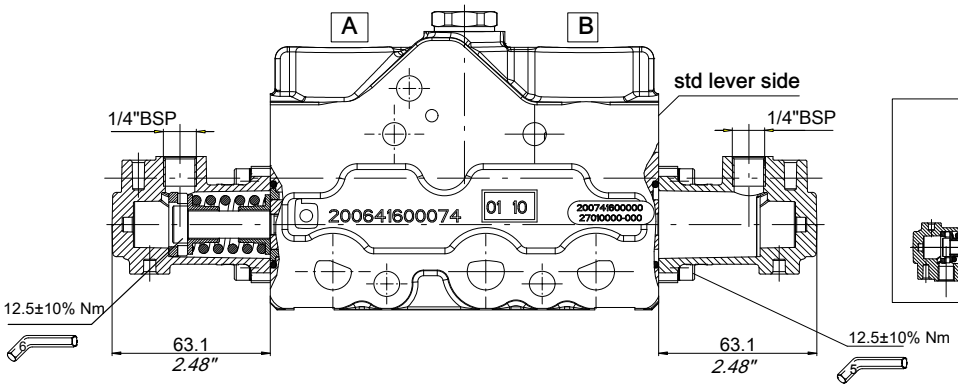

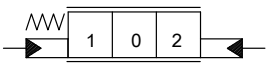

POS52-62

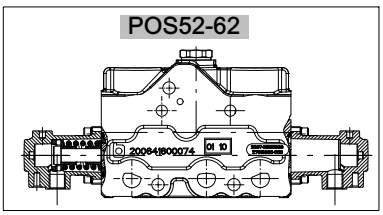

POS57-66

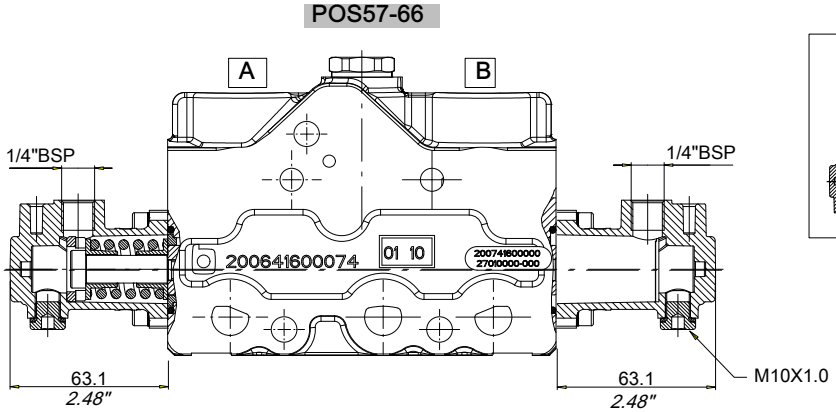

POS58-67

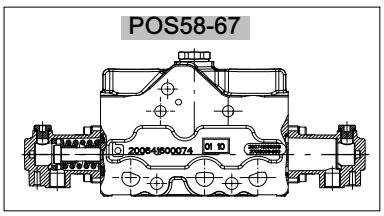

Type	Code
50-52	200768650592
60-62	200768650622
66-67	200768650741
57-58	200768650751

Body Interface	Spool type
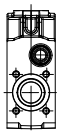	
Manual	EH

The metering area depends on the type of spool (see metering curves 4.1)

Spring type 5

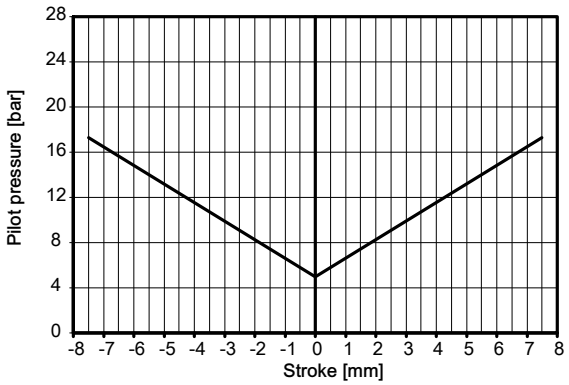

Spring type 6

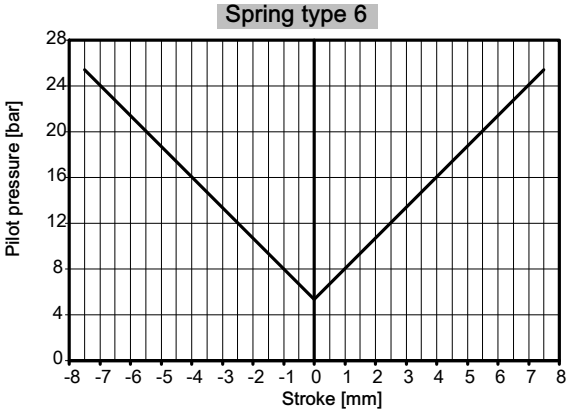

7.7 Hydraulic control + floating position

Pmax= 40 bar *(580 PSI)*

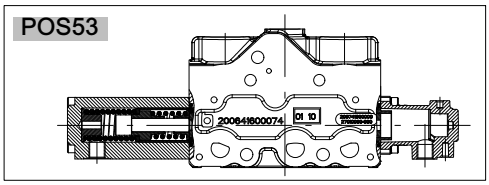

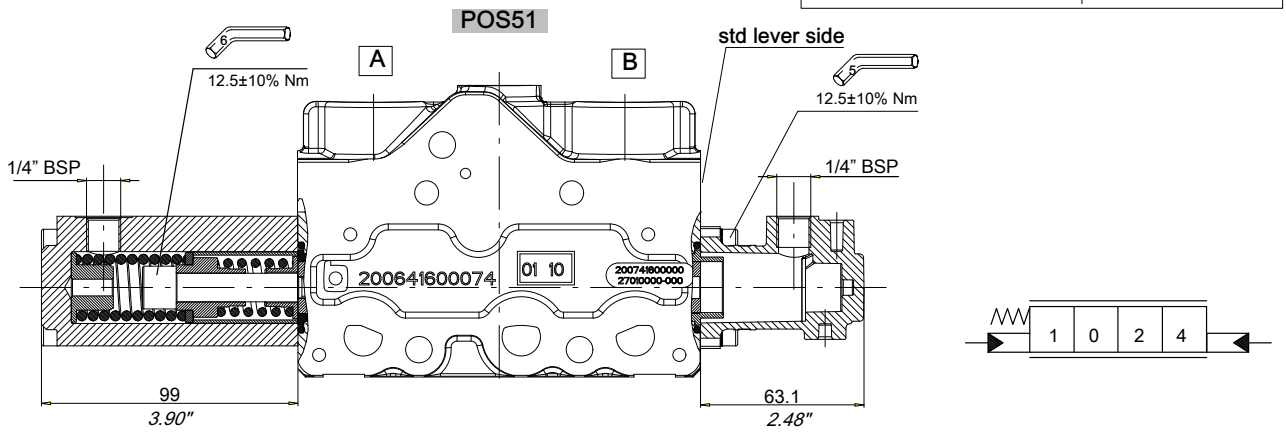

Type	Code
51-53	200768650602

Body Interface	Spool type
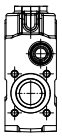	
Manual	EH

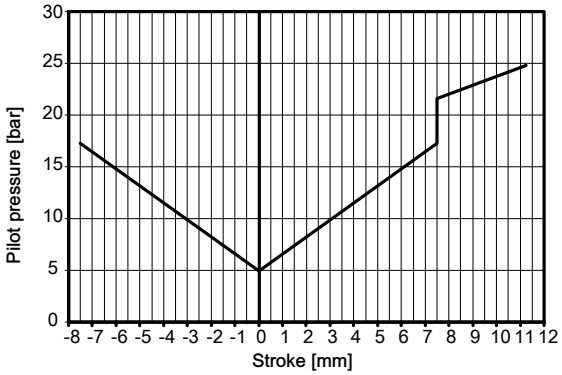

The metering area depends on the type of spool (see metering curves chapter 4.1)

7.8 Electro-hydraulic open loop proportional / ON-OFF control (EHO)

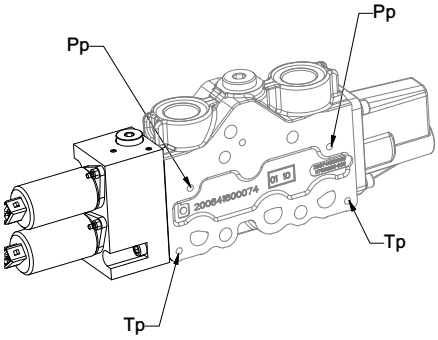

Complete PROPORTIONAL scheme

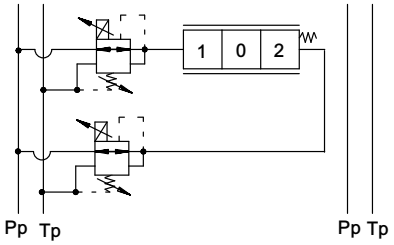

Complete ON-OFF scheme

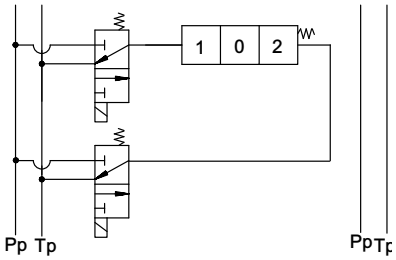

Simplified PROPORTIONAL scheme

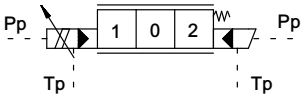

Simplified ON-OFF scheme

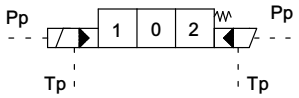

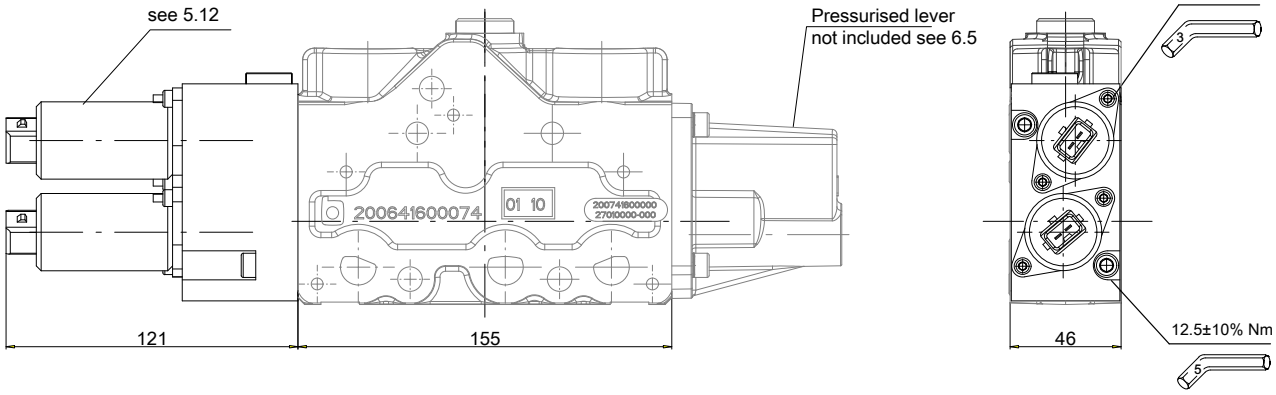

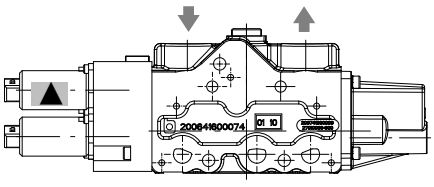

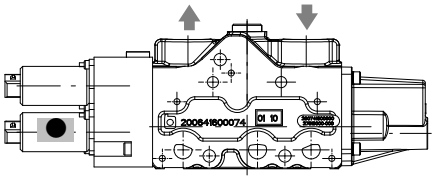

Body Interface	Spool type
Electro-hydraulic	EH

Control	Type	Code	Voltage	Connector
Proportional	300	200768660610	12 VDC	AMP 84-9419
ON-OFF	301	200768660730	12 VDC	AMP 84-9419
Proportional	302	200768660780	24 VDC	AMP 84-9419

Spring characteristic curves obtained with L001, LP01, or LA01 spring lever / positioner see 6.5

EHO standard spring curve 12V

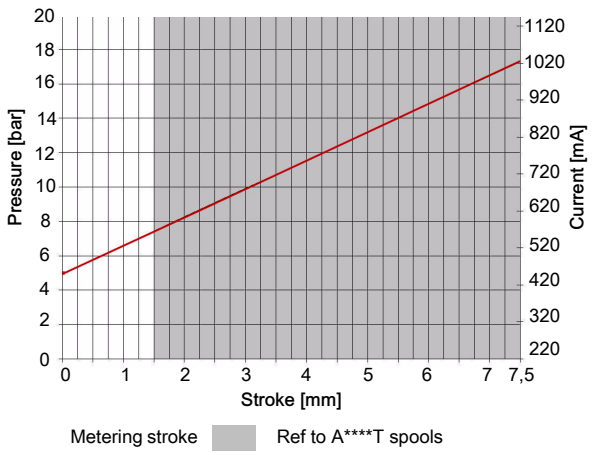

7.9 Electro-hydraulic closed loop proportional control

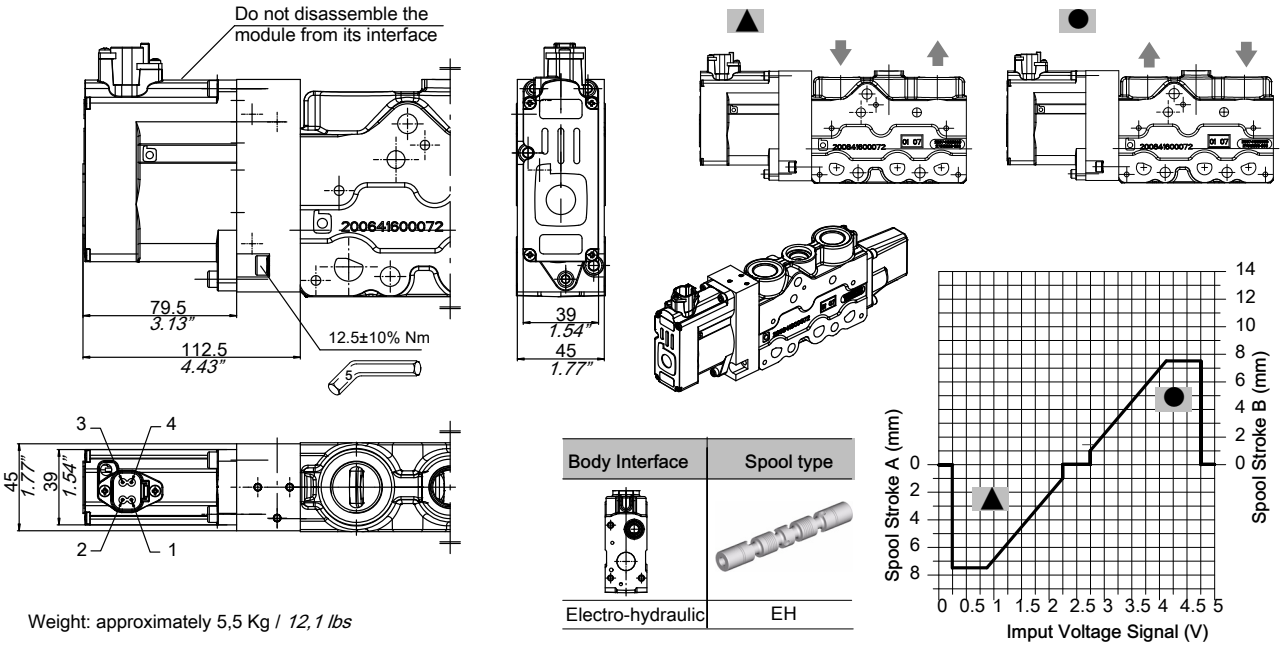

Weight: approximately 5,5 Kg / *12,1 lbs*

Code	Type	Description	Control type and output	Connector colour	Scheme
200768660720	400	FD6 D/A5-01S C1	Digital control with +5V output supply voltage	Blue	
200768660640	401	FD6 D/AF-01S C1	Digital control with spool position feed-back	Green	
On demand	-	FD6 D/CO-01S C1	Digital control with CAN bus interface	Black	

7.9.1 Module features

Hydraulic specifications	
Max supply pressure	35 bar
Min supply pressure	12 bar
Max back pressure	1.5 bar
Pilot flow requirement	0.2 lt/section
Oil temperature range	-20 / +95 °C
Oil viscosity range	3 - 650 cSt
Filtration	18/15 (ISO 4406)
Operating temperature	-20 / +105 °C

Electrical specifications	
Operating voltage	8 - 30 VDC
Max current consumption	750 mA/section
Analog input impedance	>40 kOhm
Typical ctrl pot resistance	1-10 kOhm
Analog input signal	0 - 5 V
Neutral position dead band	from 2.25 to 2.75 VDC
Signal cut-off is trigged at	< 0.25 V and > 4.75 V
Degree of protection	IP68

Deutsch Mod. DT04-4 compatible connector	Type	PIN			
		1	2	3	4
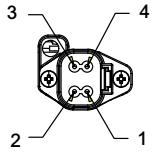	...A5	+ Power source	+ 5V output supply voltage	Control signal	Power source (GND)
	...AF	+ Power source	Sensor feed-back output signal	Control signal	Power source (GND)
	...CO	+ Power source	CANL	CANH	Power source (GND)

7.10 Spool position transducer

7.10.1 Features

Code : 200544124026

Position transducer.

± 7,5 mm linear stroke.

Hall effect sensor

Mechanical specifications	
Maximum mechanical stroke	≥±8,5mm
External diameter	35 mm
Body lenght	91 ± 8,5mm
Cable lenght (including connector)	350mm
Maximum operating pressure	5 MPa (50bar)
Operating temperature range	-25°C / +105°C
Protection class	IP 67
Connector	Amp seal, 4 male pins
Mechanical life	5 Million cycles

Electrical specifications - Linear, Hall-effect sensor	
Power Supply Voltage	6 ÷ 32 Vdc
Current Consumption	< 15 mA
Output signal in Neutral	2,5V
Output signal range	1 V ÷ 4 V
Tolerance on output signal	± 0,1 V
Maximum linearity error (-25 ÷ 85°C)	3%
Maximum linearity error (85 ÷ 105°C)	5%
Electrical stroke linearity range	± 7,5mm
Electrical life	10 Million cycles

Electrical Connections (proportional version)

1. Vcc - Blue
2. Gnd - Green/Yellow
3. Proportional Output - Brown
4. n.u. - Black

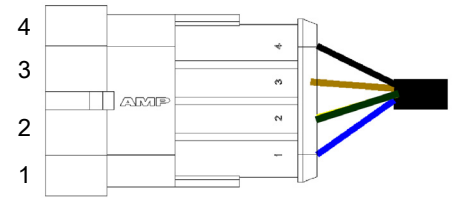

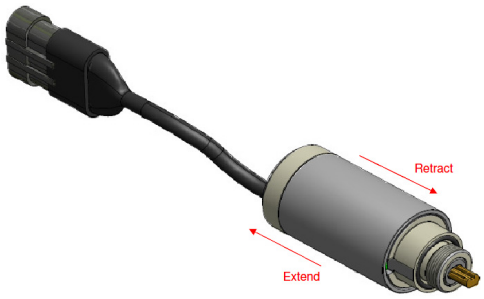

Output signal control characteristic (proportional version)

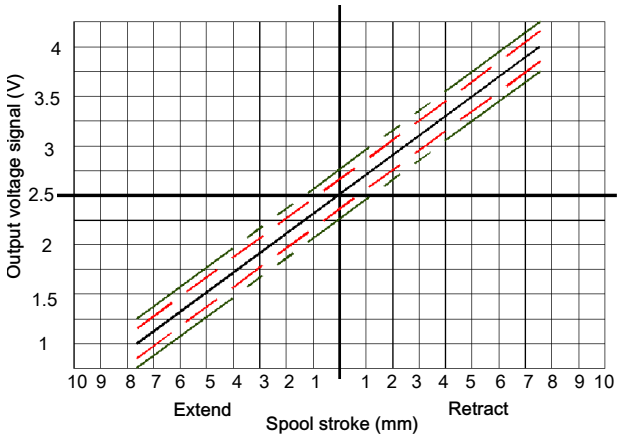

Red lines: -25 / +85 °C Green lines: 85 / 105 °C

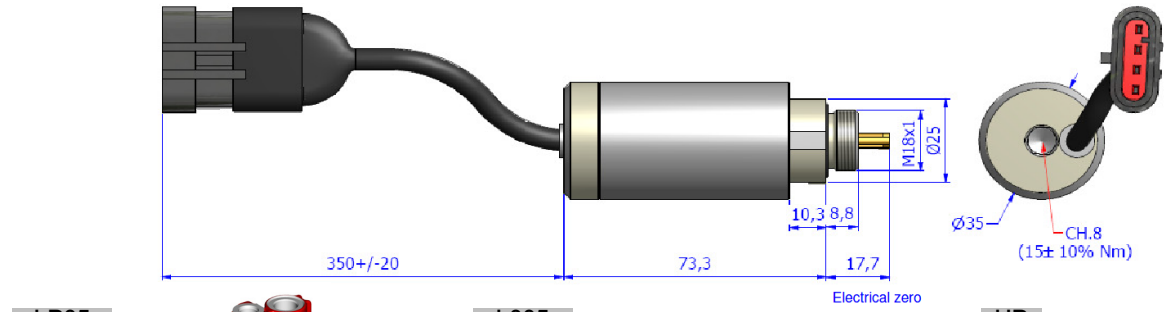

LP05

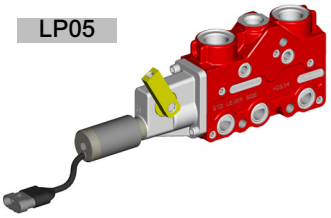

L005

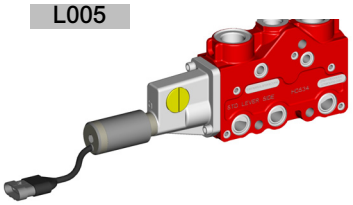

HP

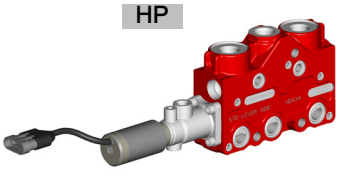

8 End covers

8.1 Blanking plate (P0... series)

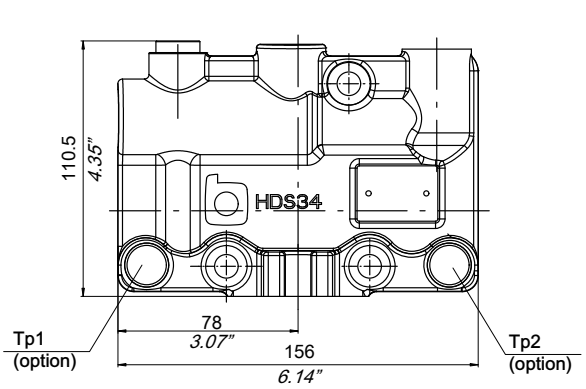

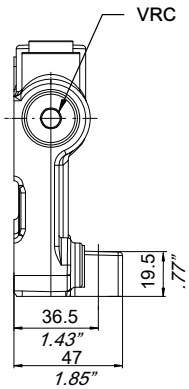

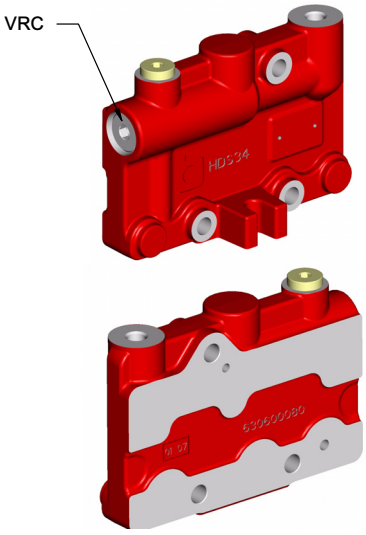

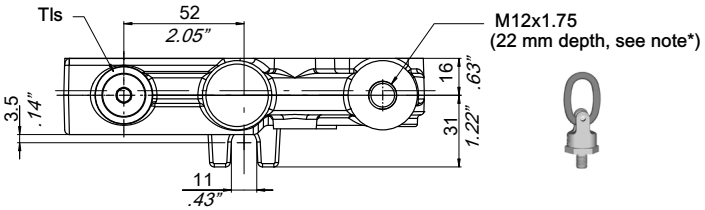

VRC= LS flow control drain valve

Threads	Tls	Tp (option)
BSP	1/4”	1/4”
UNF	SAE6	SAE6

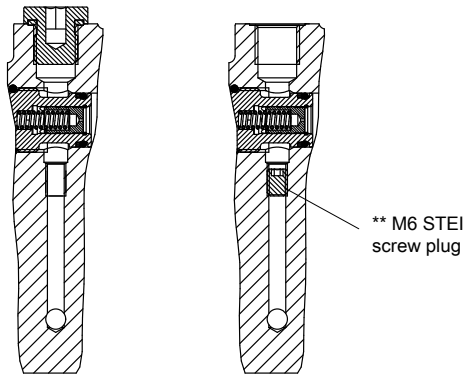

With LS flow control valve - Internal drain

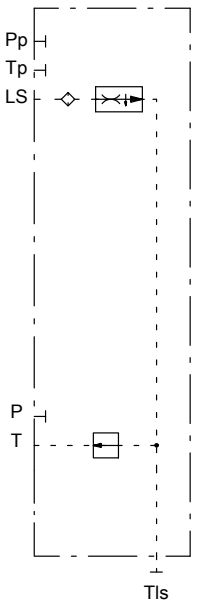

With LS flow control valve - External drain

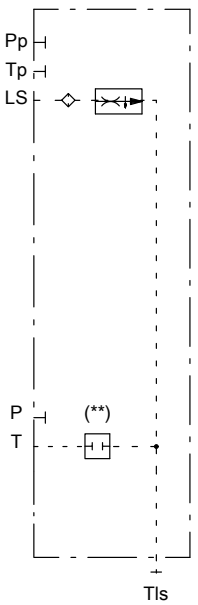

Attention: * To handle the complete valve block use the M12x1,75 threaded hole.
For the lifting operations use proper accessories like eye-bolts, cables, etc. certified and dimensioned for the weight to be lifted. Always handle with care and without giving sudden accelerations.

8.2 Blanking plate with LS drain valve and LS line manual shut-off valve (P0... series)

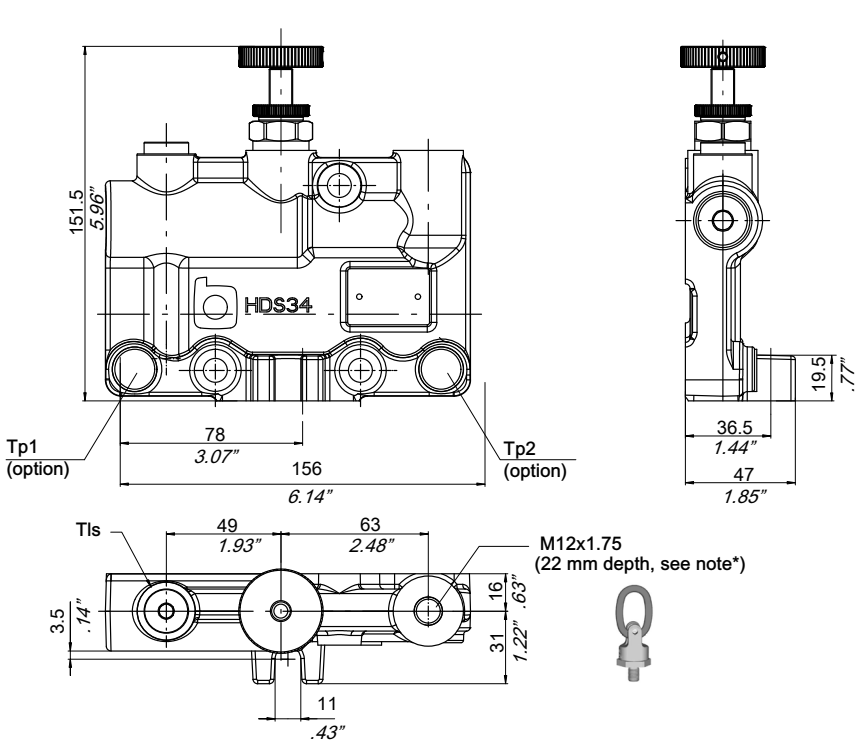

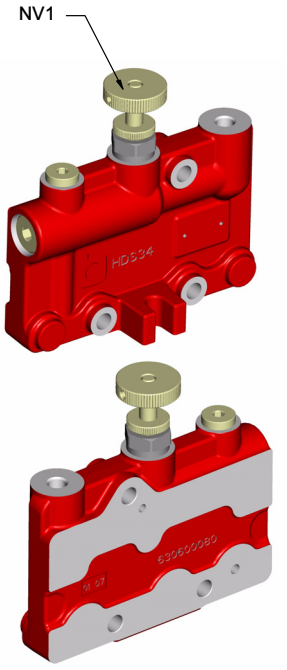

VRC= LS flow control drain valve

NV1= LS line manual shut-off valve

Threads	Tls	Tp (option)
BSP	1/4"	1/4"
UNF	SAE6	SAE6

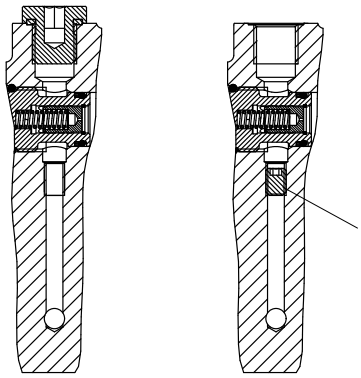

With LS line manual shut-off valve Internal drain

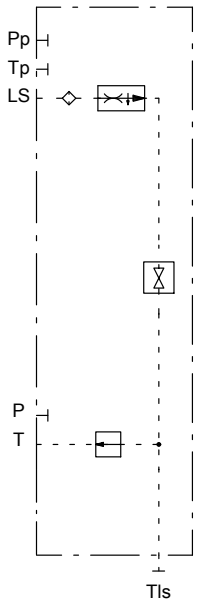

With LS line manual shut-off valve External drain

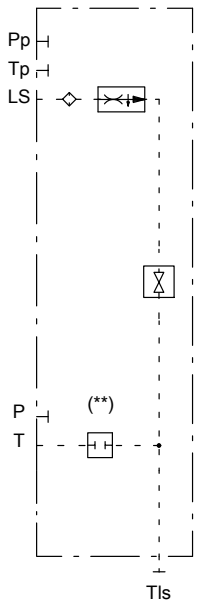

Attention: * To handle the complete valve block use the M12x1,75 threaded hole.
For the lifting operations use proper accessories like eye-bolts, cables, etc. certified and dimensioned for the weight to be lifted. Always handle with care and without giving sudden accelerations.

8.3 End cover with tank line ports (PT... series)

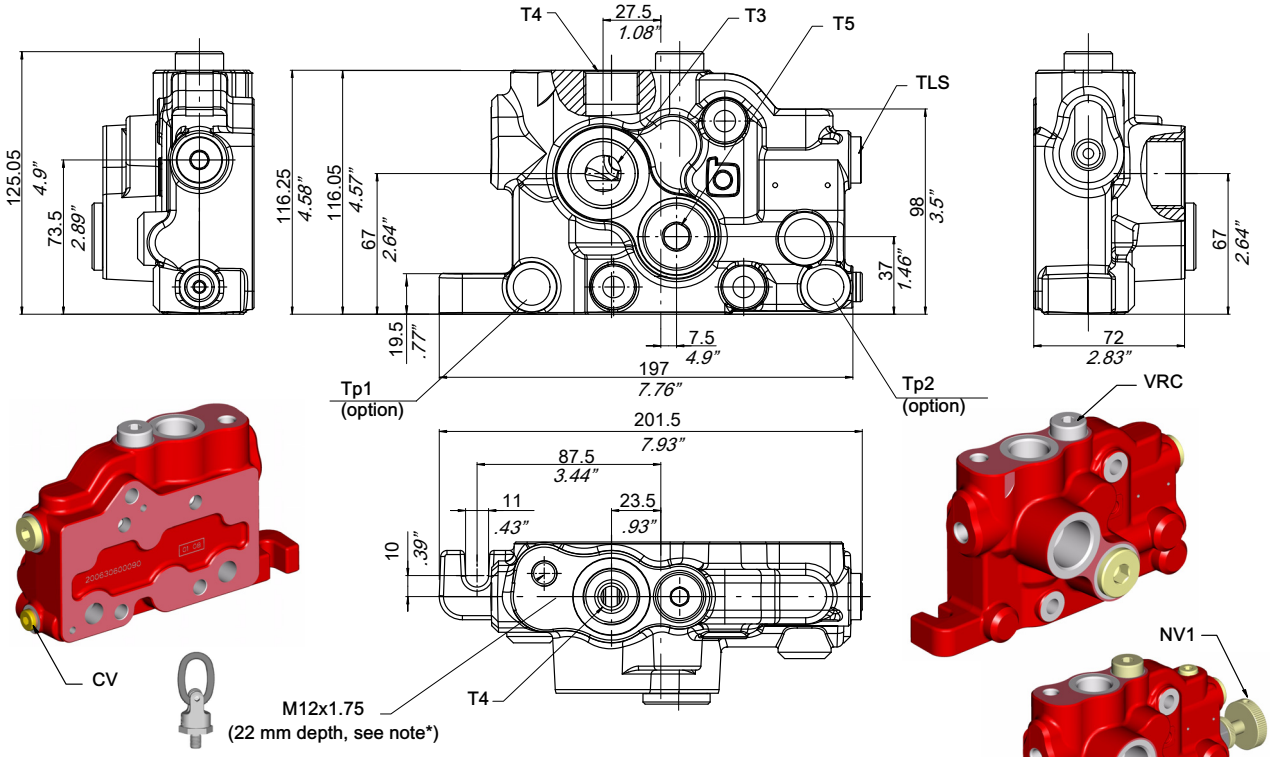

CV = pilot tank line check valve

VRC= LS flow control drain valve

NV1= LS line manual shut-off valve (option)

Threads	T4	T3	T5	Tls	Tp (option)
BSP	3/4”	1“	3/4”	3/8”	1/4”
UNF	SAE12	SAE16	SAE12	SAE8	SAE6

With internal drain + pilot tank line check valve

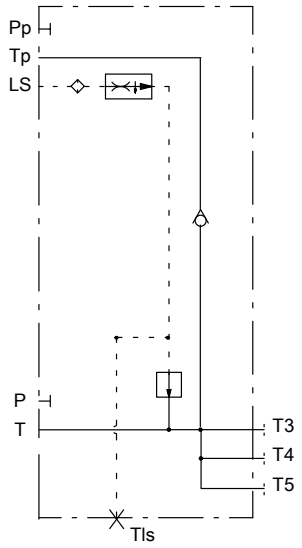

With Manual LS shut-off valve + pilot tank line check valve

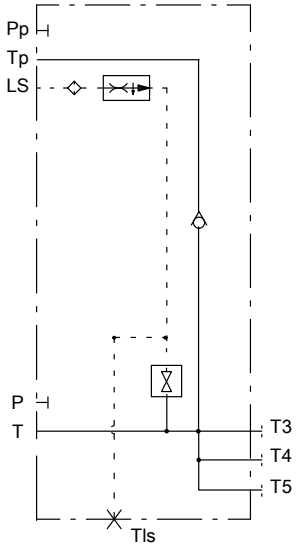

With LS external drain + pilot tank line check valve

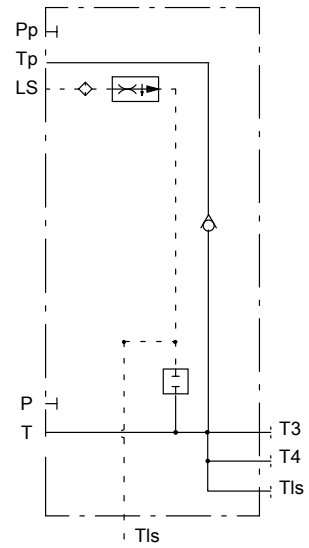

Attention: * To handle the complete valve block use the M12x1,75 threaded hole.
For the lifting operations use proper accessories like eye-bolts, cables, etc. certified and dimensioned for the weight to be lifted. Always handle with care and without giving sudden accelerations.

8.4 End cover with LS relief valve and tank line ports (PT... series)

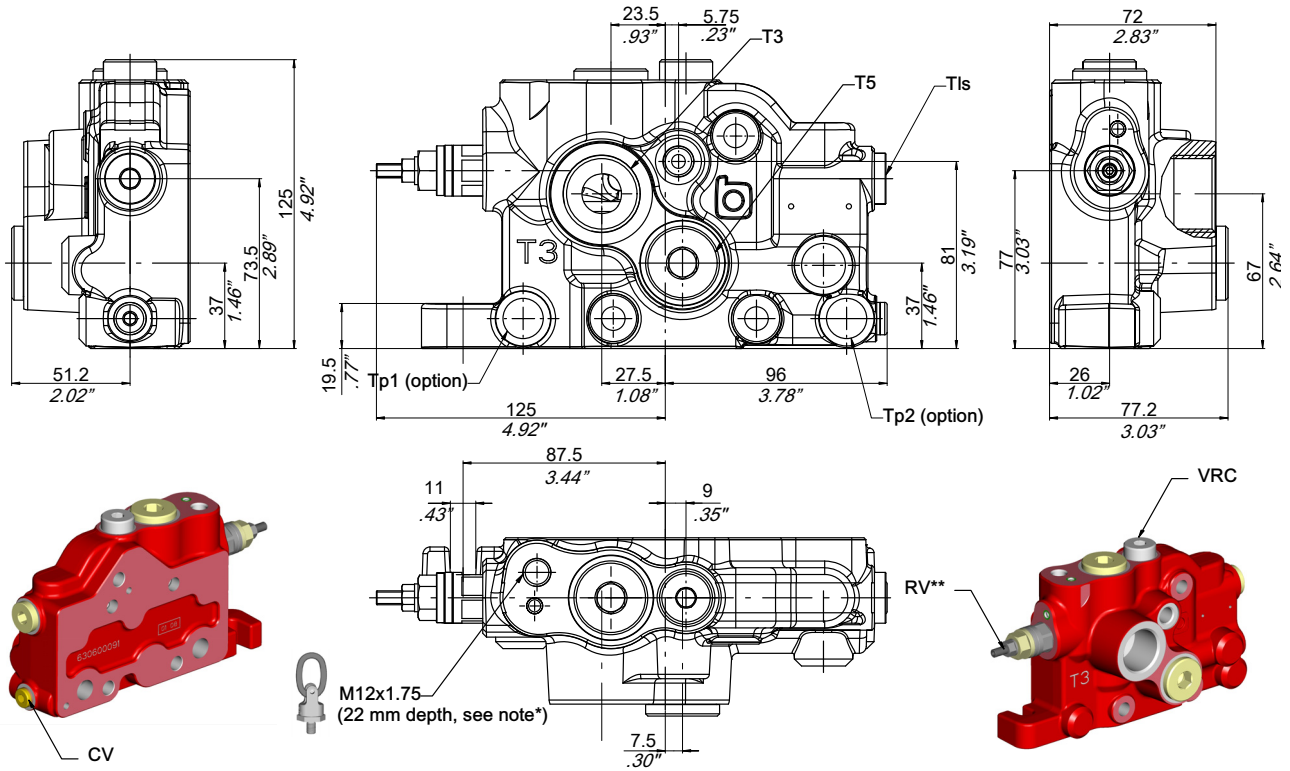

RV = LS signal adjustable relief valve

VRC = LS flow control drain valve

CV = pilot tank line check valve

Threads	T3	T5	Tls	Tp (option)
BSP	1”	3/4”	3/8”	1/4”
UNF	SAE16	SAE12	SAE8	SAE6

With LS relief valve + pilot tank line check valve

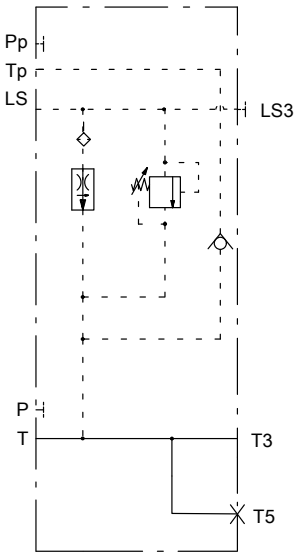

To be used with LS pumps, only.
Pump LS line must be connected to LS3 port.

Attention: * To handle the complete valve block use the M12x1,75 threaded hole.
For the lifting operations use proper accessories like eye-bolts, cables, etc. certified and dimensioned for the weight to be lifted. Always handle with care and without giving sudden accelerations.

8.5 End cover with unloading compensator (PC... series)

Used in combination with priority for steering inlet cover allows to unload to tank the full flow of a fixed displacement pump or the stand-by flow of an LS pump. The compensator spring must be chosen according to the type of pump.

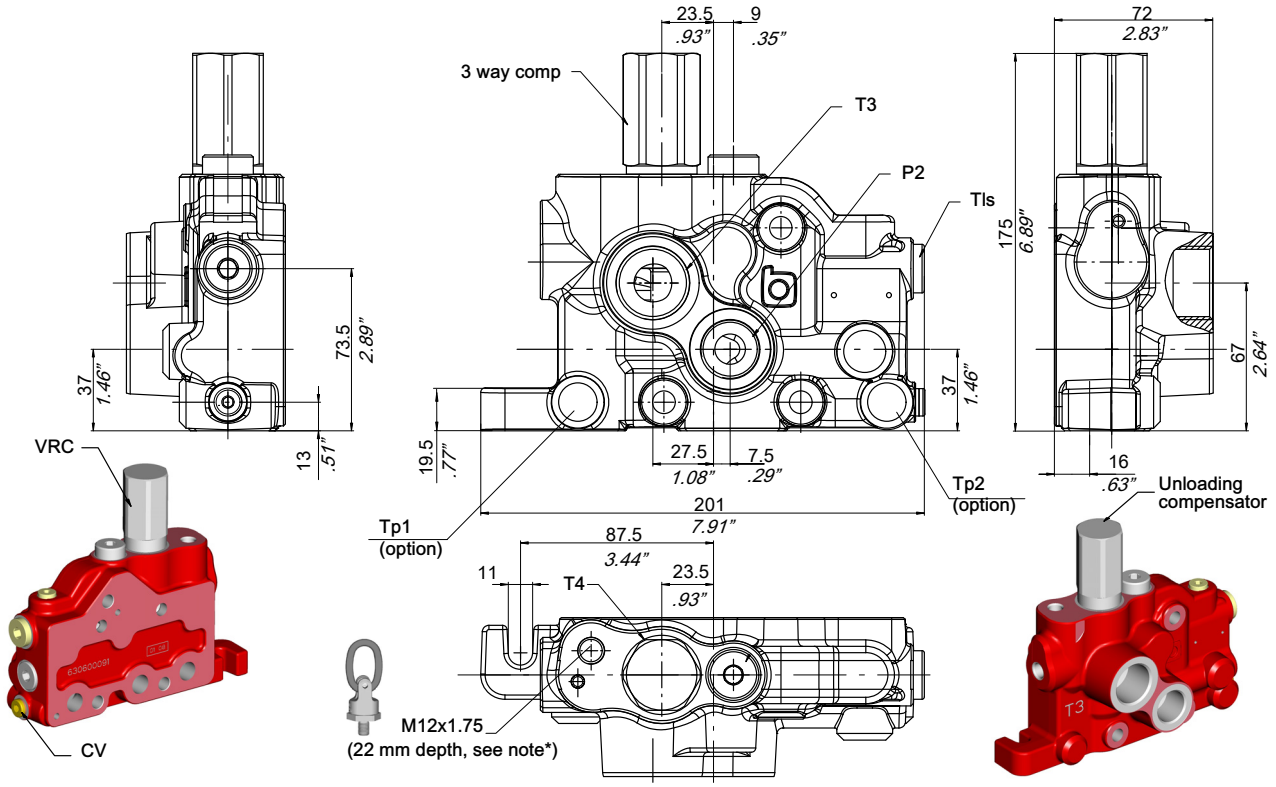

CV = pilot tank line check valve

VRC = LS flow control drain valve

Threads	T3	P2	Tls	Tp
BSP	1”	3/4”	3/8”	1/4”
UNF	SAE16	SAE12	SAE8	SAE6

With LS flow control drain valve and internal drain + pilot tank line check valve

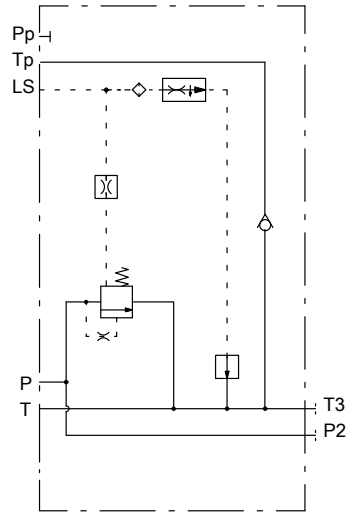

With LS flow control drain valve and external drain + pilot tank line check valve

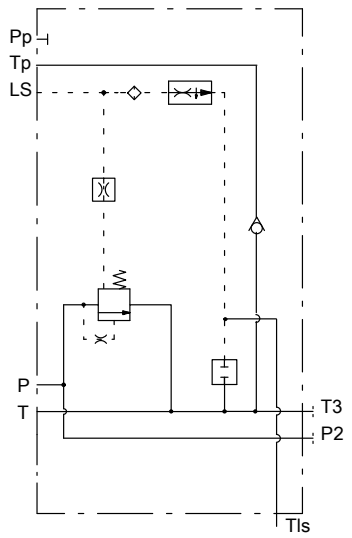

Attention: * To handle the complete valve block use the M12x1,75 threaded hole.
For the lifting operations use proper accessories like eye-bolts, cables, etc. certified and dimensioned for the weight to be lifted. Always handle with care and without giving sudden accelerations.

8.6 Sliding function end cover specific for backhoe application (PS... series)

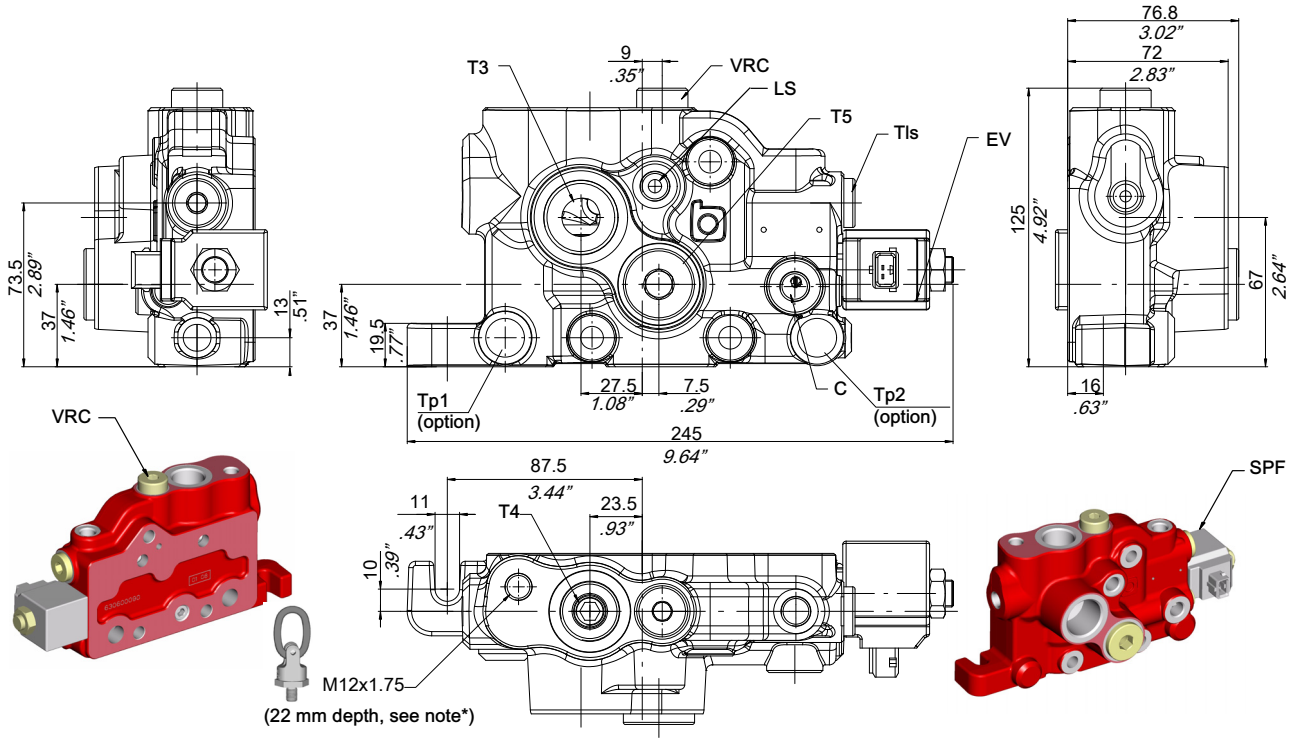

SPF = sliding frame release lock solenoid valve

CV = pilot tank line check valve (option)

VRC = LS flow control drain valve

Threads	T4	T3	Tls	LS (option)	C	Tp (option)
BSP	3/4”	1“	3/8”	1/4”	1/4”	1/4”
UNF	SAE12	SAE16	SAE8	SAE6	SAE6	SAE8

Without LS flow control drain valve

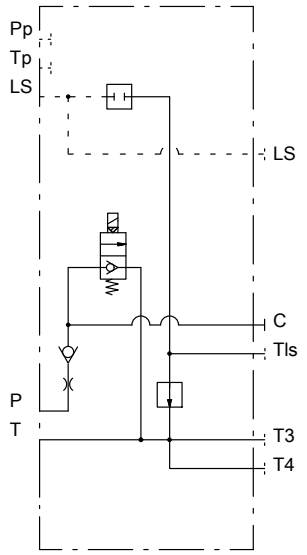

With LS flow control drain valve

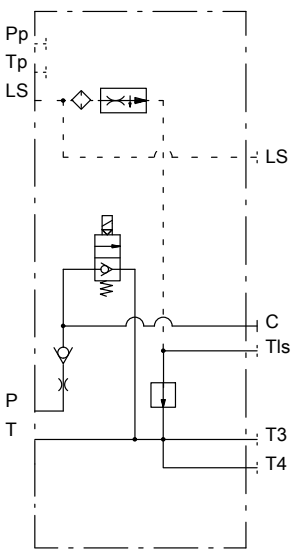

Without LS flow control drain valve + pilot tank line check valve

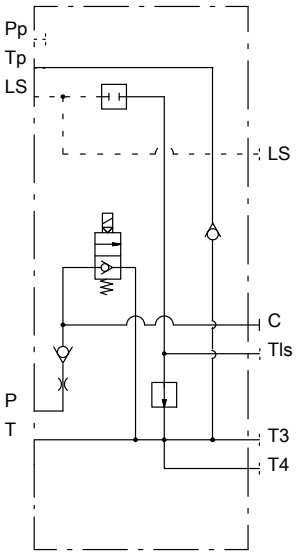

With LS flow control drain valve + pilot tank line check valve

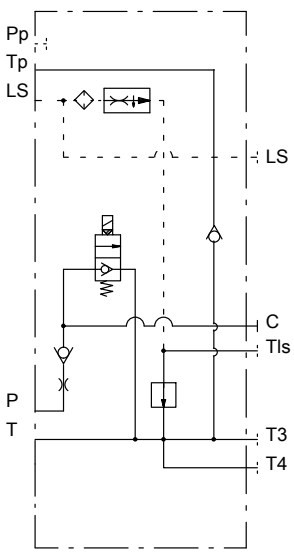

Attention: * To handle the complete valve block use the M12x1,75 threaded hole.
For the lifting operations use proper accessories like eye-bolts, cables, etc. certified and dimensioned for the weight to be lifted. Always handle with care and without giving sudden accelerations.

9 Suitable applications (Examples)

Telehandlers

With compensator (KC)

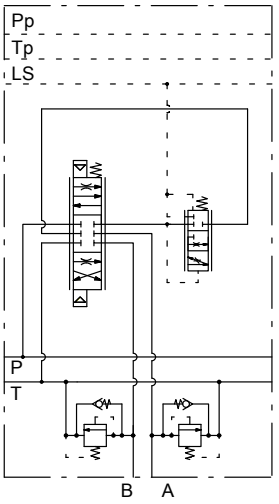

With check valve (KU)

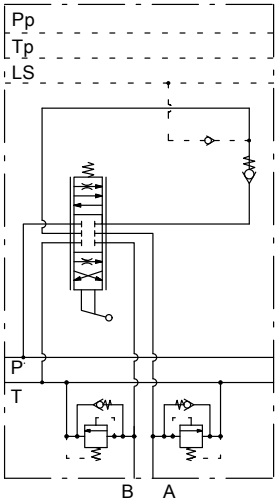

Wheel Loaders

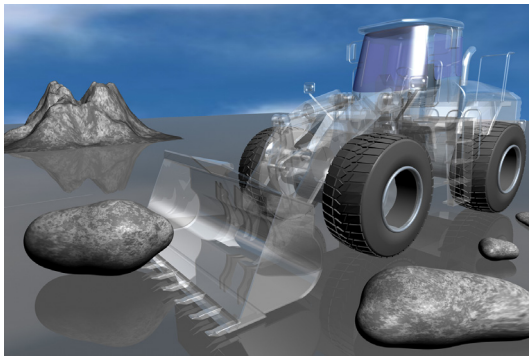

With compensator and check function (KL)

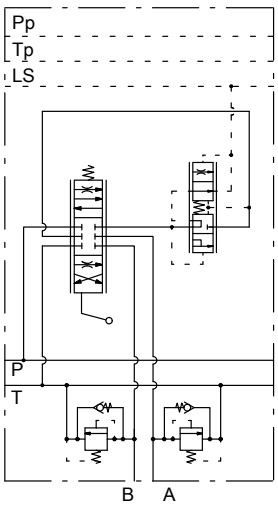

Backhoe Loaders

9.1 Telehandlers
Assembling positions / controls flexibility

Closed loop controls for more precise operations and electronic management of machine safety functions.

Open loop controls for a high degree of freedom in terms of assembling position.

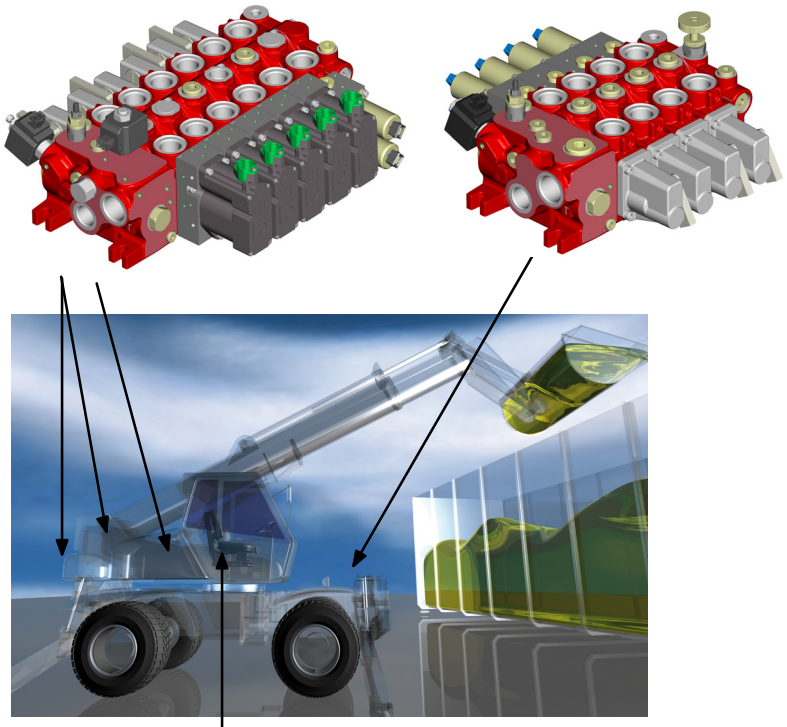

Customised inlet covers with additional functions

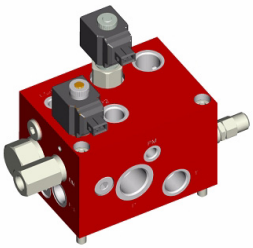

Direct manual joystick compact configuration suitable to be assembled on the cabin side

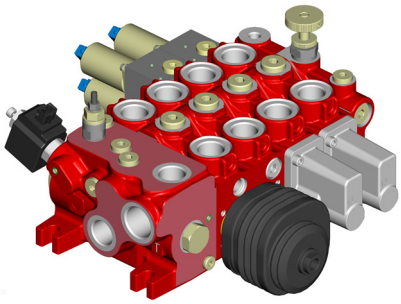

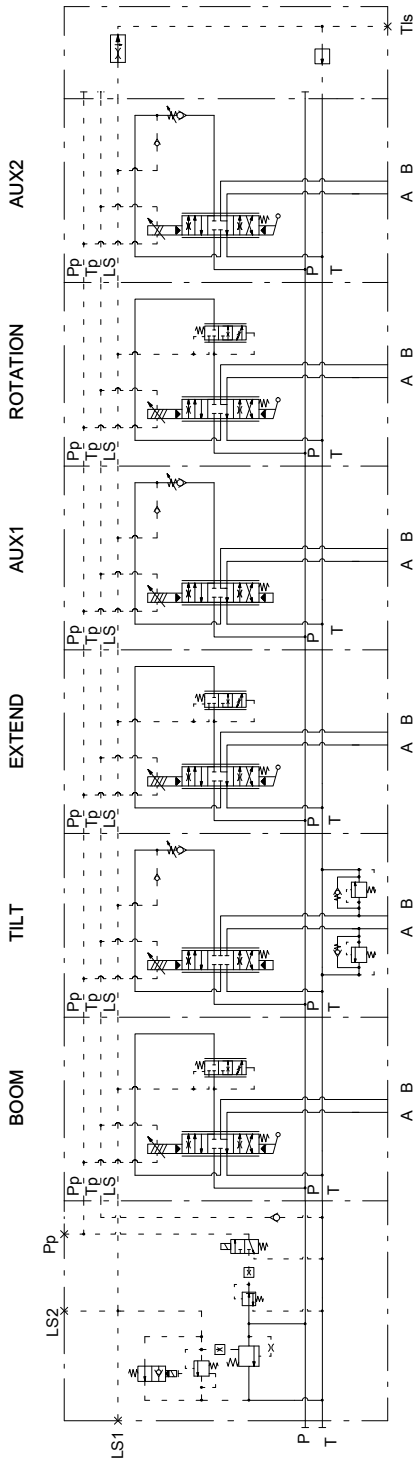

9.2 Wheel loader
Assembling positions / controls flexibility

Direct manual joystick
For a cost effective solution

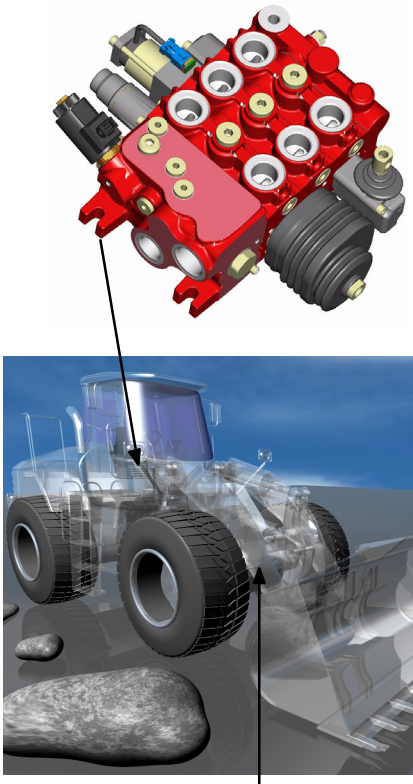

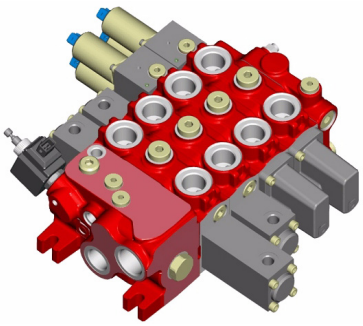

Proportional controls for a high degree of freedom in terms of assembling position

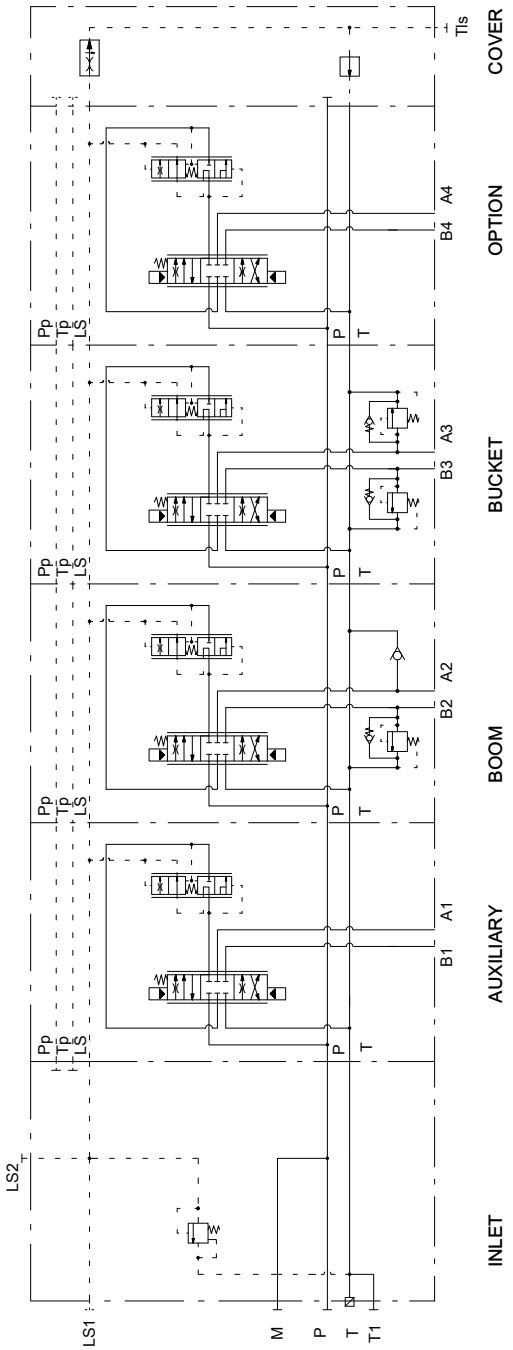

9.3 Backhoe loader
Assembling positions / controls flexibility

Front loader basic

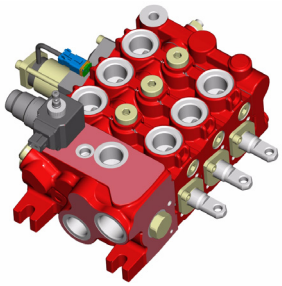

Backhoe basic

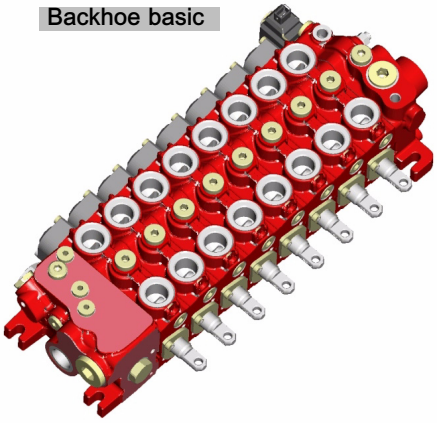

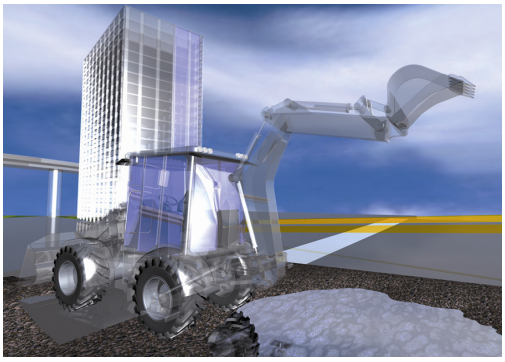

Front loader hydraulic / electro-hydraulic controlled

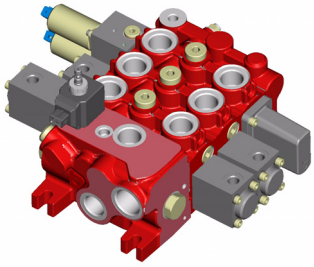

Backhoe hydraulic controlled

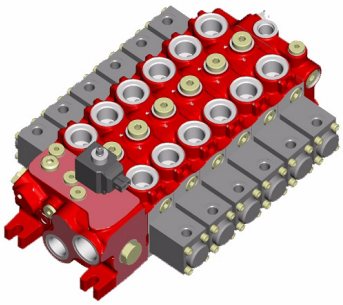

Backhoe electro-hydraulic controlled

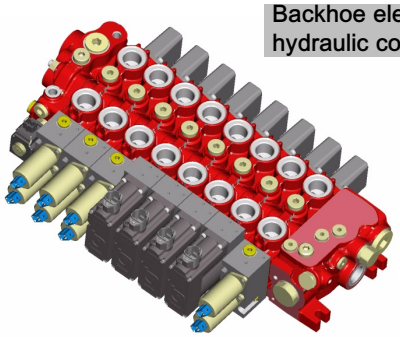

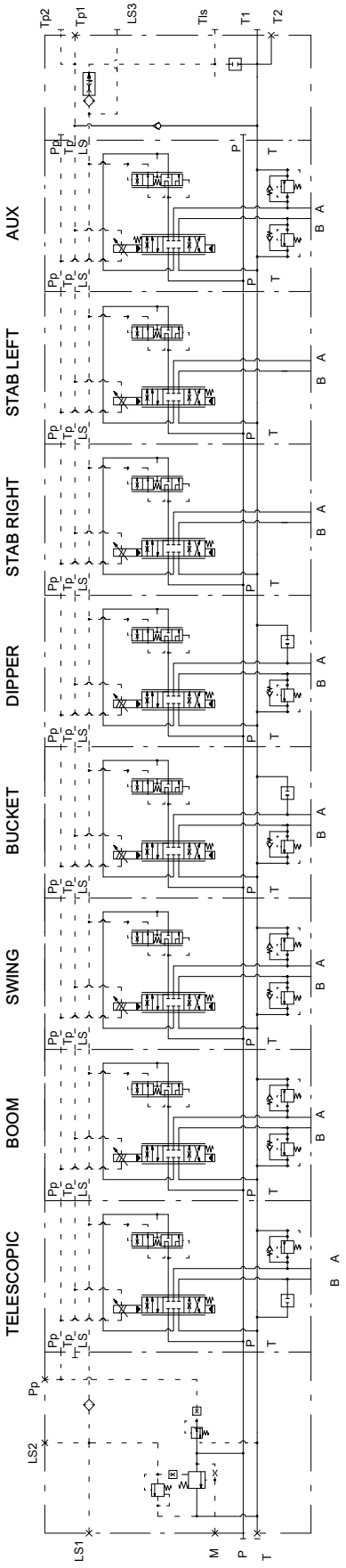

10 Composition of ordering code

10.1 Std inlet cover

T	E	S	T	3	4	T	V	2	0	1	0	0	-	2	5	0	0	0	0	0	0	0	0	0	0	0	0
T	E	S	T	3	4	T	F	2	0	1	1	3	-	2	7	0	S	P	E	2	5	S	D	8	1	7	1	2	A	M	P	C	V
T	E	S	T	3	4	T	F	2	0	1	1	3	-	2	3	0	S	P	F	3	0	0	0	0	0	0	0	A	M	P	C	V

TF = inlet cover for systems with fixed displacement pump

TV = inlet cover for systems with LS pump

"P" PORT THREAD
3/4" BSP = ... 2
SAE12 = ... 4
Different = ... 9

Inlet cover version (do not fill)

00 = dummy spool (LS pump)

13 = Unloading compensator
13 bar spring

LS relief valve pressure setting (RV)
000 = not requested
270 = 270 bar - see 5.1

LS signal solenoid unloading valve (Normally open)
000 = not requested
SPE = with manual override
SPF = without manual override

Pilot supply pressure reducing valve PRR818
00 = not requested
25 = 25 bar (suitable for EHC positioner)
30 = 30 bar (suitable for EHO positioner)

Pilot oil supply cut-off valve
00000 = not requested
SD817 = without manual override

Voltage:
00 = without coil
12 = 12 VDC
24 = 24 VDC

Connector style (the male connector is not included)
000 = coil not requested
AMP = AMP 84-9419
DIN = DIN 43650

00 = not requested
CV = pilot tank line check valve

10.2 Priority for steering inlet cover

TEST34	TS201	11-270	25	SD817	12	AMP	CV
TEST34	TS201	11-250	30	SD817	12	AMP	CV
TEST34	TS201	11-230	00	00000	00	000	00

TS = inlet cover for systems with LS pump and priority function for steering

"P" PORT THREAD
3/4" BSP = ... 2
SAE12 = ... 4
Different = ... 9

Inlet cover version (do not fill)

11 = steering compensator 11 bar spring

LS relief valve pressure setting (RV)
000 = not requested
270 = 270 bar - see 5.1

Pilot oil supply pressure reducing valve
00 = not requested
25 = 25 bar (suitable for EHC positioner)
30 = 30 bar (suitable for EHO positioner)

Pilot oil supply cut-off valve
00000 = not requested
SD817 = without manual override

Voltage:
00 = without coil
12 = 12 VDC
24 = 24 VDC

Connector style (the connector is not included)
000 = coil not requested
AMP = AMP 84 - 9419
DIN = DIN 43650

00 = not requested
CV = pilot tank line check valve

10.3 Elements

HDS34	KC201	C1515T	349	L100	00000000	I
HDS34	KC201	A0604TR	300	L001	VCA20B00	
HDS34	KC201	A1010T	400	LP03	UCA23B23	

Body version
KC = with compensator
KL = with compensator and check function
KU = with check valve, only. (functions with load holding valves)

PORT THREADS
1/2" BSP = ... 1
3/4" BSP = ... 2
SAE10 = ... 3
SAE12 = ... 4
Different = ... 9

Element version (do not fill)

Spool type (see chapter 4)

Specific design

Positioner (see chapter 7)

Lever type (see chapter 6) - Do not fill in with hydraulic proportional positioner

Service port valves:
UC = anti-shock and anti-cavitation valves
C = anti-cavitation valves
VC= plugged

A service port setting:
00 (not requested)
25 = 250 bar

B service port setting:
00 (not requested)
25 = 250 bar

I = spool inverted - Positioner assembled on the standard lever side (to be omitted if not necessary)

Std spool assembling position

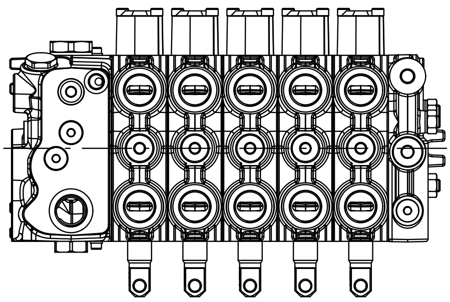

Inverted spools assembling position
(the positioners are assembled on the std lever side)

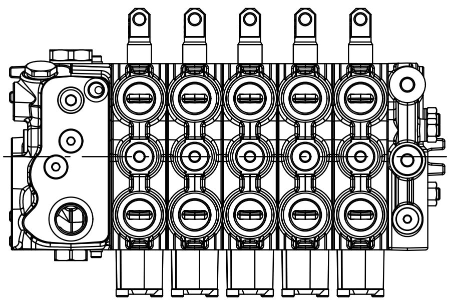

10.4 Blanking plate end cover

COP34	P001	VRC	NV1	000	000	00
COP34	P002	VRC	000	TLS	BSP	TP
COP34	P001	VRC	NV1	TLS	BSP	00

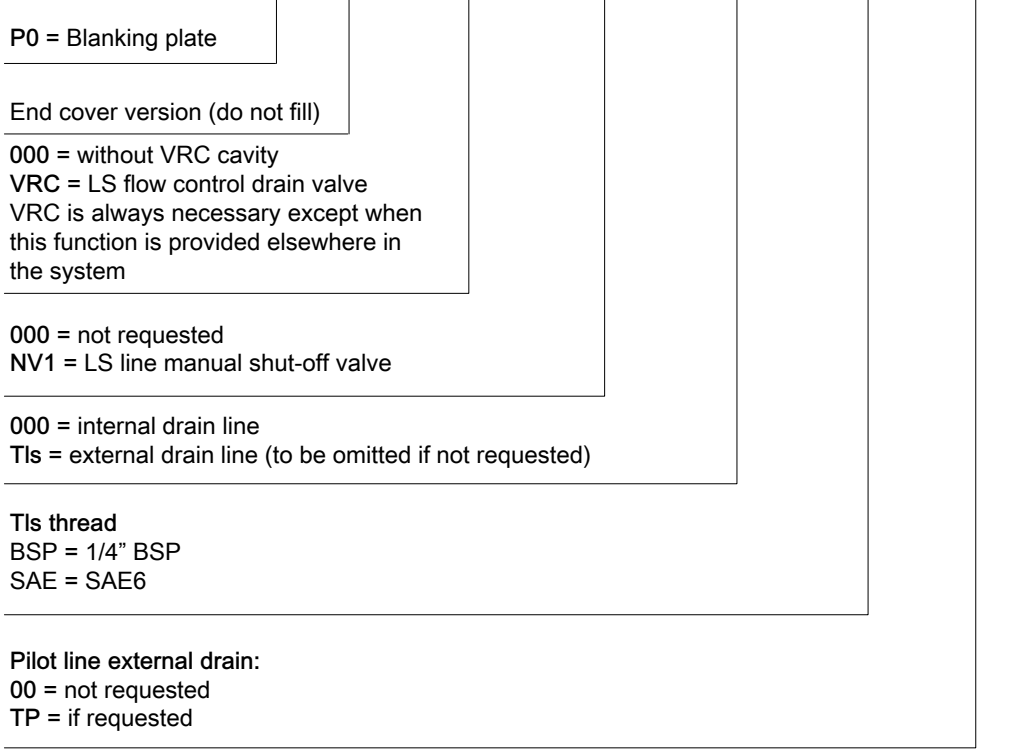

10.5 End cover with tank line ports

COP34	PT901	VRC	NV1	TLS	BSP	TP	CV	270
COP34	PT901	VRC	000	000	000	00	CV	000
COP34	PT902	VRC	NV1	000	000	00	CV	000

PT = With tank line

T3 = tank line port
1/2" BSP = .. 1
3/4" BSP = .. 2
SAE10 = ... 3
SAE12 = ... 4
1" BSP = ... 9

End cover version (do not fill)

VRC = LS flow control drain valve.
Always necessary except when this function is provided elsewhere in the system

000 = not requested LS line
NV1 = LS line manual shut-off valve

000 = internal drain line
Tls = external drain line (omitted if not requested)

Tls thread
BSP = 3/8" BSP
SAE = SAE8

Pilot line external drain:
00 = not requested
TP = if requested

00 = not requested
CV = pilot tank line check valve

LS relief valve pressure setting (RV)
000 = not requested
270 = 270 bar - see 5.1

10.6 End cover with unloading compensator

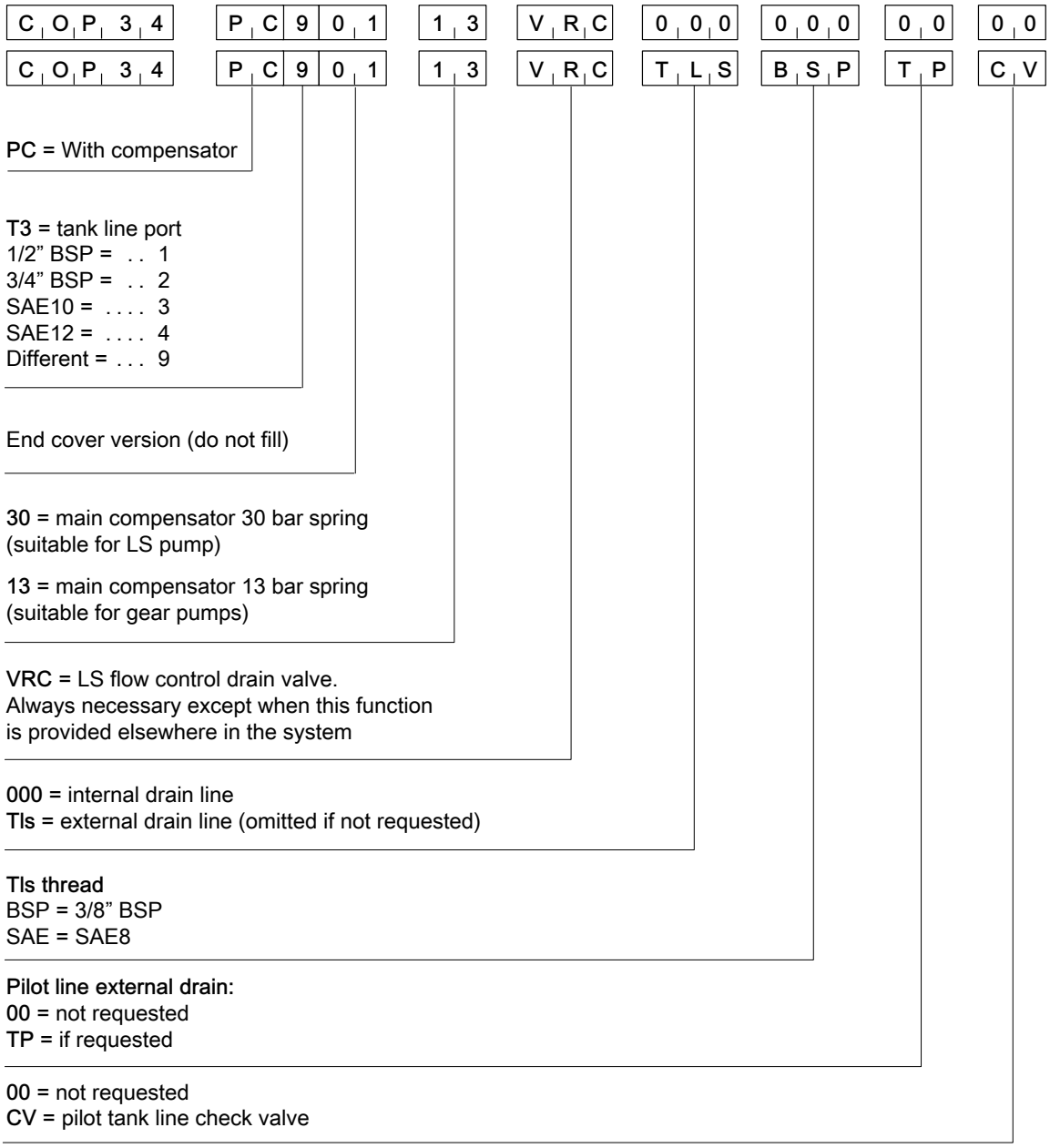

10.7 Sliding function end cover

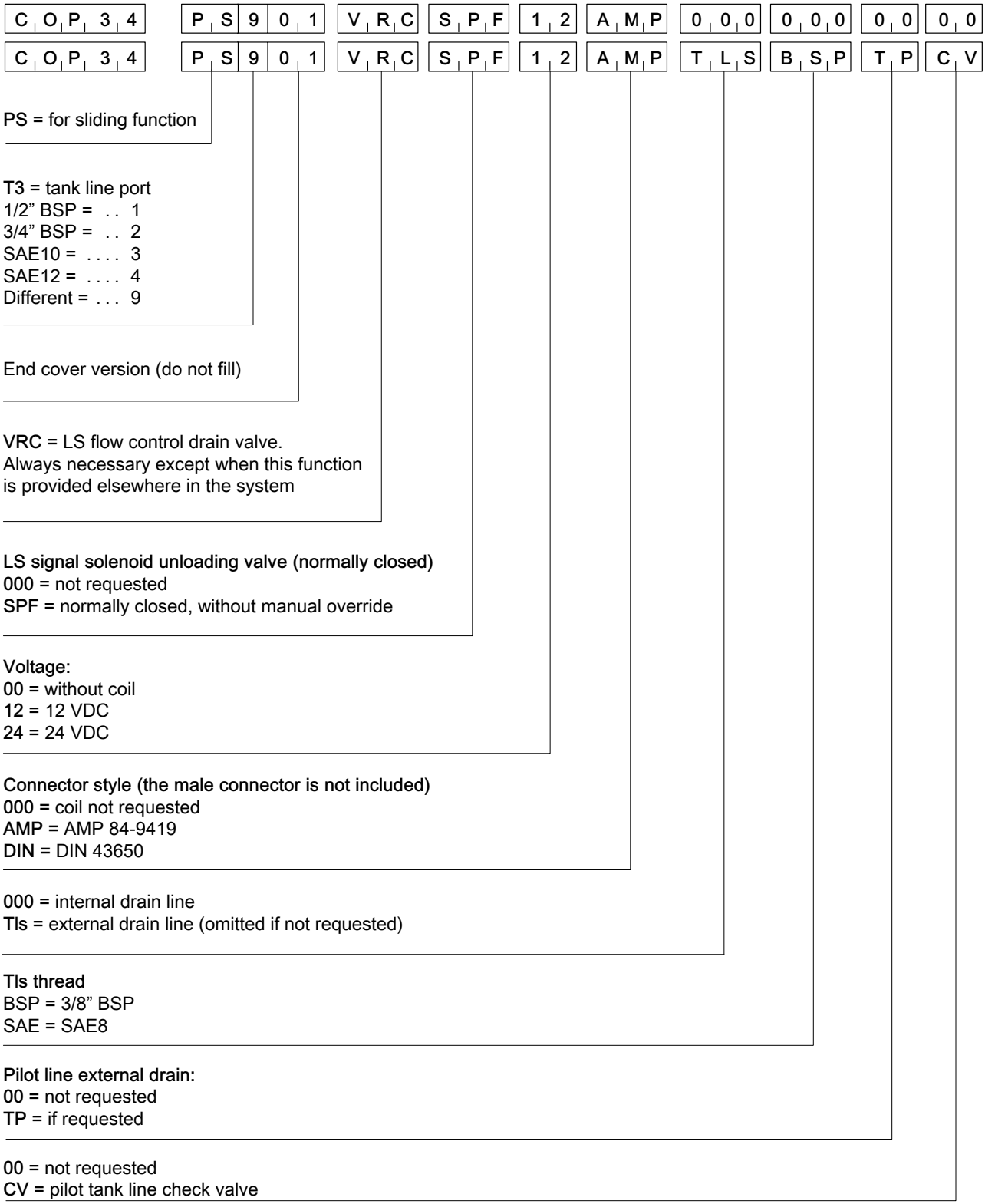

10.8 Product identification plate

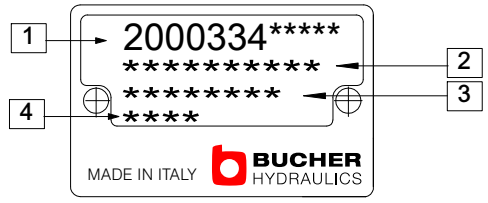

1 : BHRE Product Order Code.

2 : Customer Code (on demand, only - if not request there will be the Manufacturing year and month).

3 : WO : Production Work Order .

4 : WO progressive number.

Manufacturing month	Manufacturing year					
	2012	2013	2014	2015	2016	2017
January	2A	3A	4A	5A	6A	7A
February	2B	3B	4B	5B	6B	7B
March	2C	3C	4C	5C	6C	7C
April	2D	3D	4D	5D	6D	7D
May	2E	3E	4E	5E	6E	7E
June	2F	3F	4F	5F	6F	7F
July	2G	3G	4G	5G	6G	7G
August	2H	3H	4H	5H	6H	7H
September	2I	3I	4I	5I	6I	7I
October	2J	3J	4J	5J	6J	7J
November	2K	3K	4K	5K	6K	7K
December	2L	3L	4L	5L	6L	7L

info.it@bucherhydraulics.com www.bucherhydraulics.com

© 2014 by Bucher Hydraulics S.p.A, I-42124 Reggio Emilia
All rights reserved.
Data is provided for the purpose of product description only, and must not be construed as warranted characteristics in the legal sense. The information does not relieve users from the duty of conducting their own evaluations and tests. Because the products are subject to continual improvement, we reserve the right to amend the product specifications contained in this catalogue.

Classification: 430.300.000