Series LCP***M

Dimensions

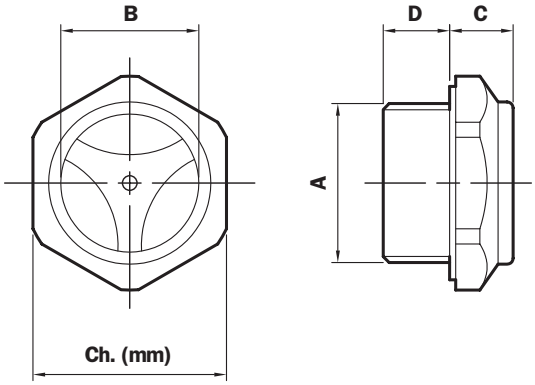

LCP*M** (Materials)

1 - Body: Aluminium

2 - Lens: Thermoplastic

3 - Contrast screen: Nylon

4 - Seal: Inorganic fibre

Quantity per pack
Number of Parts

LCP/M	25

Spare parts

Size	Seal Inorg. fibre
G20	1.026.902
G26	1.026.903
G33	1.026.905

Size	A	B	C	Ch. (mm)	D
G20	G 1/2”	16	9	27	10
G26	G 3/4”	20	10	32	12
G33	G 1”	25	11	40	14

N.B. Seals thickness 2 mm.
Recommended tightening torque 10÷15 Nm.

Ordering information

Level indicator
LCP*M**
Example: LCP

1	2	3	4	5
☐	☐	☐	☐	☐
G20	**M**	**C**	**B**	**P01**

1 - Size

- **G20** G 1/2”
- **G26** G 3/4”
- **G33** G 1”

2 - Material

- **M** Metal (Aluminium)

3 - Accessories

- **C** Baffle

4 - Seal

- **A** Inorganic fibre

5 - Options

- **P01** MP Filtri standard

Dimensions

Standard view

With view contrast and Expansion kit

LCP***N**S

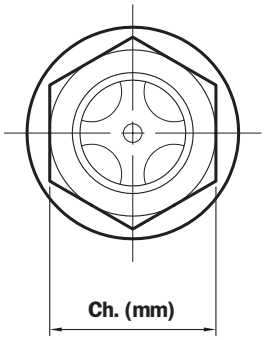

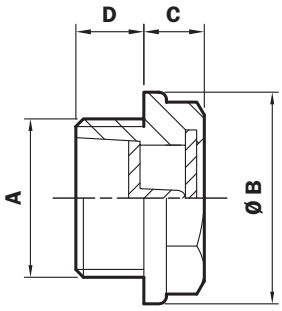

LCP***N**K

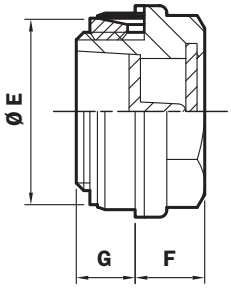

Size	A	Ø B	C	Ch. (mm)	D	Ø E	F	G
G13	G 1/4”	20	7	17	9	-	-	-
G16	G 3/8”	22	8	18	9	19,5	9,2	7,8
G20	G 1/2”	28	8	22	9	25,5	9,2	7,8
G26	G 3/4”	35	9	27	10	29,5	10,5	8,5
G33	G 1”	42	11,5	34	12,5	39	13	11
G42	G 1 1/4”	52	12	42	13	49	13,5	11,5
G48	G 1 1/2”	58	14	47	13	54	15,5	11,5
G60	G 2”	74	14	64	20	-	-	-

N.B. Recommended tightening torque 10 Nm.

LCP*N***** (Materials)**

1 - Body: Nylon

2 - Lens: Thermoplastic

3 - Contrast screen: Nylon

4 - Seals: NBR
Inorganic fibre

5 - Expansion kit: Brass - NBR

Quantity per pack
Number of Parts

LCP/N	25

Ø hole for Expansion kit

Size	Diameter
G16	Ø 20
G20	Ø 26
G26	Ø 30
G33	Ø 40
G42	Ø 50
G48	Ø 55

Spare parts

Size	Expansion Kit
-	-
G16	2026020
G20	2026021
G26	2026019
G33	2026023
G42	2026025
G48	2026026
-	-

Ordering information

Level indicator
LCP*N**
Example: LCP

1	2	3	4	5	6
G20	**N**	**C**	**A**	**K**	**P01**

1 - Size

G13	G 1/4”
G16	G 3/8”
G20	G 1/2”
G26	G 3/4”
G33	G 1”
G42	G 1 1/4”
G48	G 1 1/2”
G60	G 2”

2 - Material

N	Black nylon

3 - Accessories

S	Standard view
C	Baffle (for except G13)

4 - Seal

A	NBR (only K)
B	Inorganic fibre

5 - Expansion kit

S	Without
K	Expansion kit (for except G13)

6 - Options

P01	MP Filtri standard

Series LCP***T

Dimensions

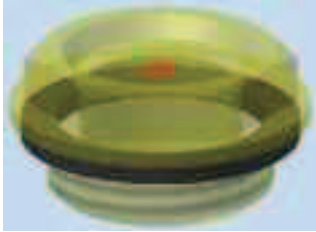

LCP*T** (Materials)

1 - Body: Polyamide

2 - Contrast screen: Nylon

3 - Seal: NBR

Quantity per pack
Number of Parts

LCP/T	25

LCP*T**

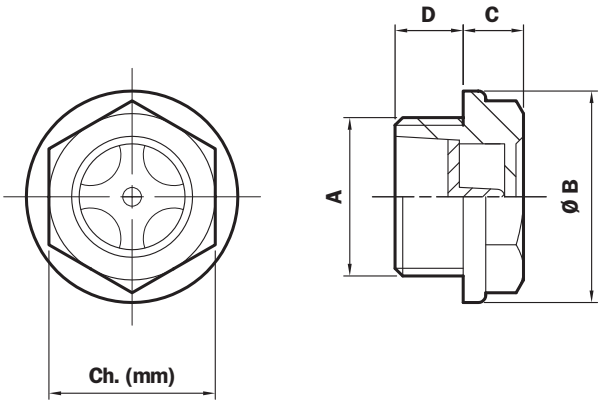

Size	A	Ø B	C	Ch. (mm)	D
G13	G 1/4"	19	4,5	15	7
G16	G 3/8"	21,7	5	17	7,5
G20	G 1/2"	27	5,5	21	8
G26	G 3/4"	32,8	6	26	9
G33	G 1"	39,8	6,5	32	10
G42	G 1 1/4"	52	12	42	13

N.B. Seals thickness 2 mm.
Recommended tightening torque 10 Nm.

Ordering information

Level indicator
LCP*T**
Example: LCP

1	2	3	4	5
G20	T	S	A	P01

1 - Size

G13	G 1/4"
G16	G 3/8"
G20	G 1/2"
G26	G 3/4"
G33	G 1"
G42	G 1 1/4"

2 - Material

T	Polyamide

3 - Accessories

S	Without baffie
C	Baffie (G26-G33-G42 only)

4 - Seal

A	Fibre inorganique

5 - Options

P01	MP Filtri standard

Dimensions

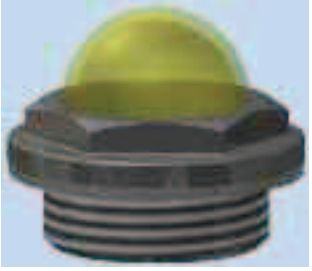

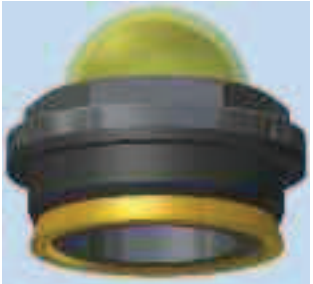

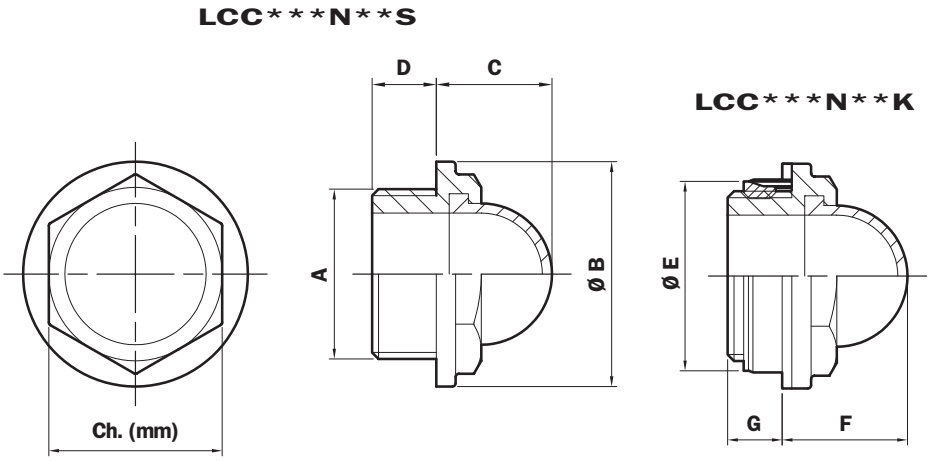

LCC*N******* (Materials)

1 - Body: Nylon

2 - Lens: Polyamide

3 - Contrast screen: Nylon

4 - Seals: NBR
Inorganic fibre

5 - Expansion kit: Brass - NBR

Quantity per pack
Number of Parts

LCC/N	25

Size	A	Ø B	C	Ch. (mm)	D	Ø E	F	G
G20	G 1/2”	28	15,5	22	9,5	25,5	16,5	8,3
G26	G 3/4”	35	18	27	10	29,5	19,5	8,5
G33	G 1”	42	22	34	12	39	23,5	10,5
G42	G 1 1/4”	52	28	44	13	49	29,5	11,5
G48	G 1 1/2”	58	31	50	13,5	54	32,5	12
G60	G 2”	74	37	64	20	-	-	-

N.B. Seals thickness 2 mm.
Recommended tightening torque 10 Nm.

Ø hole for Expansion kit

Size	Diamètre
G20	Ø 26
G26	Ø 30
G33	Ø 40
G42	Ø 50
G48	Ø 55

Spare parts

Size	Expansion Kit
G20	**G20**
G26	**G26**
G33	**G33**
G42	**G42**
G48	**G48**
-	**-**

Ordering information

Level indicator
LCC*N**

	1	2	3	4	5
	☐	☐	☐	☐	☐
Example: LCC	**G26**	**N**	**A**	**K**	**P01**

1 - Size

G20	G 1/2”
G26	G 3/4”
G33	G 1”
G42	G 1 1/4”
G48	G 1 1/2”
G60	G 2”

2 - Material

N	Black nylon

3 - Seal

A	NBR (K only)
B	Inorganic fibre

4 - Expansion kit

S	Without
K	Expansion kit

5 - Options

P01	MP Filtri standard

Series LCC***T

Dimensions

LCC*T** (Materials)

1 - Body: Polyamide

2 - Seal: NBR

Quantity per pack
Number of Parts

LCC/T	25

LCC*T**

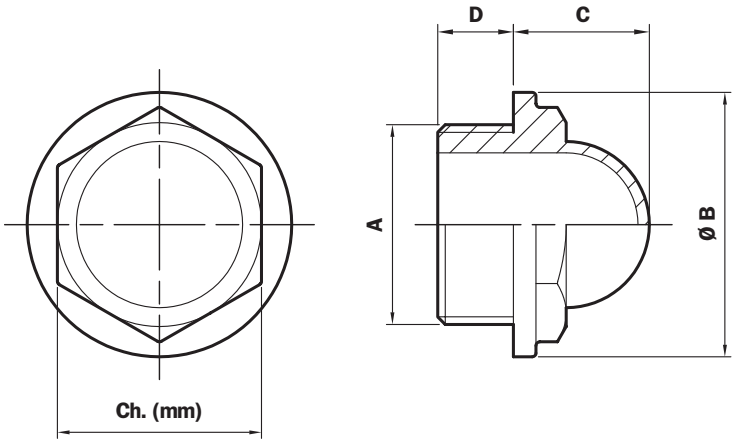

Size	A	Ø B	C	Ch. (mm)	D
G13	G 1/4"	19	10,5	15	7
G16	G 3/8"	21,7	12	17	7,5
G20	G 1/2"	27	14,5	21	8
G26	G 3/4"	32,8	17	26	9
G33	G 1"	39,8	20,5	32	10

N.B. Seals thickness 2 mm.
Recommended tightening torque 10 Nm.

Ordering information

Level indicator
LCC*T**
Example: LCC

1	2	3	4
G20	T	A	P01

1 - Size

- **G13** G 1/4"
- **G16** G 3/8"
- **G20** G 1/2"
- **G26** G 3/4"
- **G33** G 1"

2 - Material

- **T** Polyamide

3 - Seal

- **A** NBR

4 - Options

- **P01** MP Filtri standard

Notes

The data in this publication are purely guideline. MP Filtri reserves the right to make changes to the models described herein at any time it deems fit in relation to technical or commercial requirements. The colours of the products shown on the cover are purely guideline. Copyright. All rights reserved.